499-000032

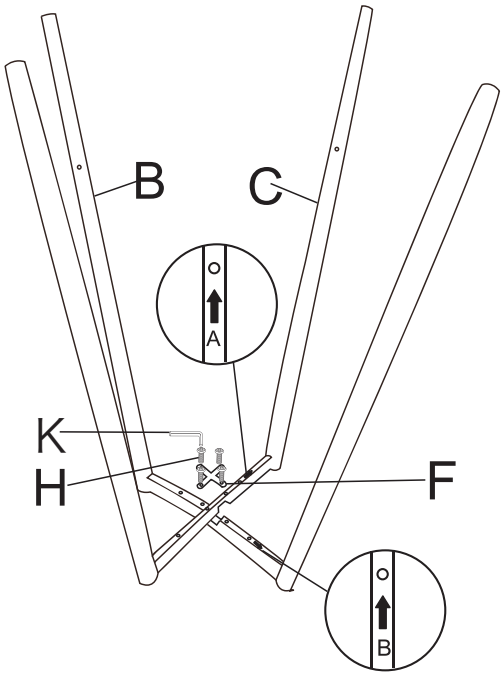

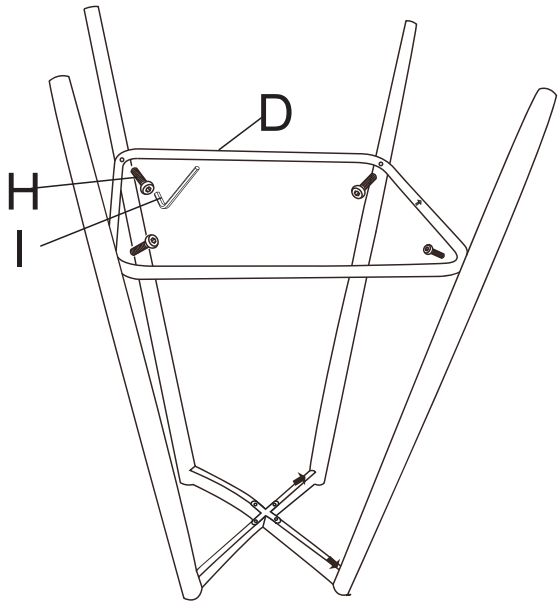

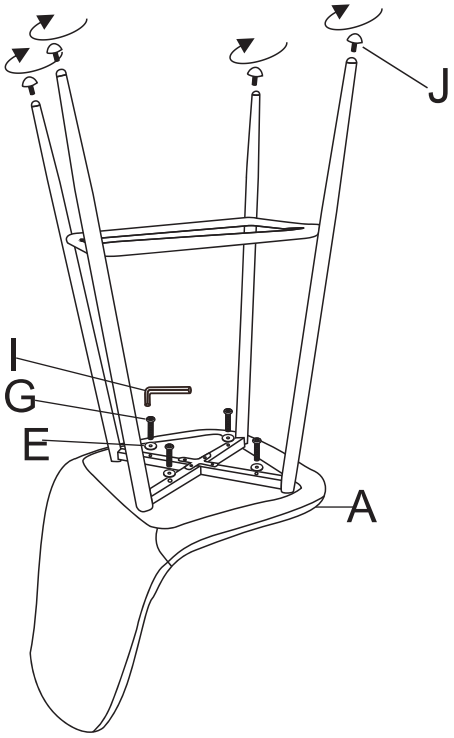

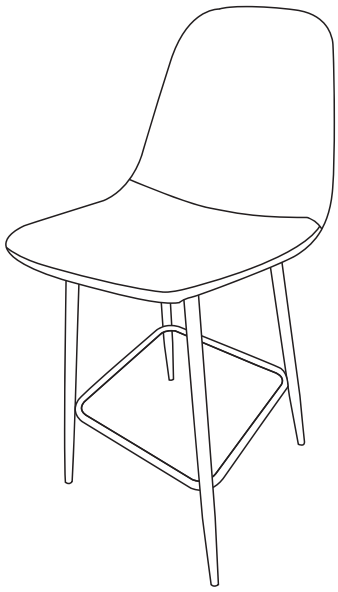

Ax1	Bx1	Cx1	Dx1	Ex4	Fx1
			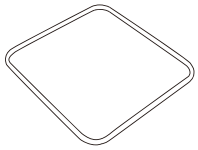		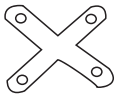
Gx4	Hx8	Ix1	Jx4	Kx4	