395-000001

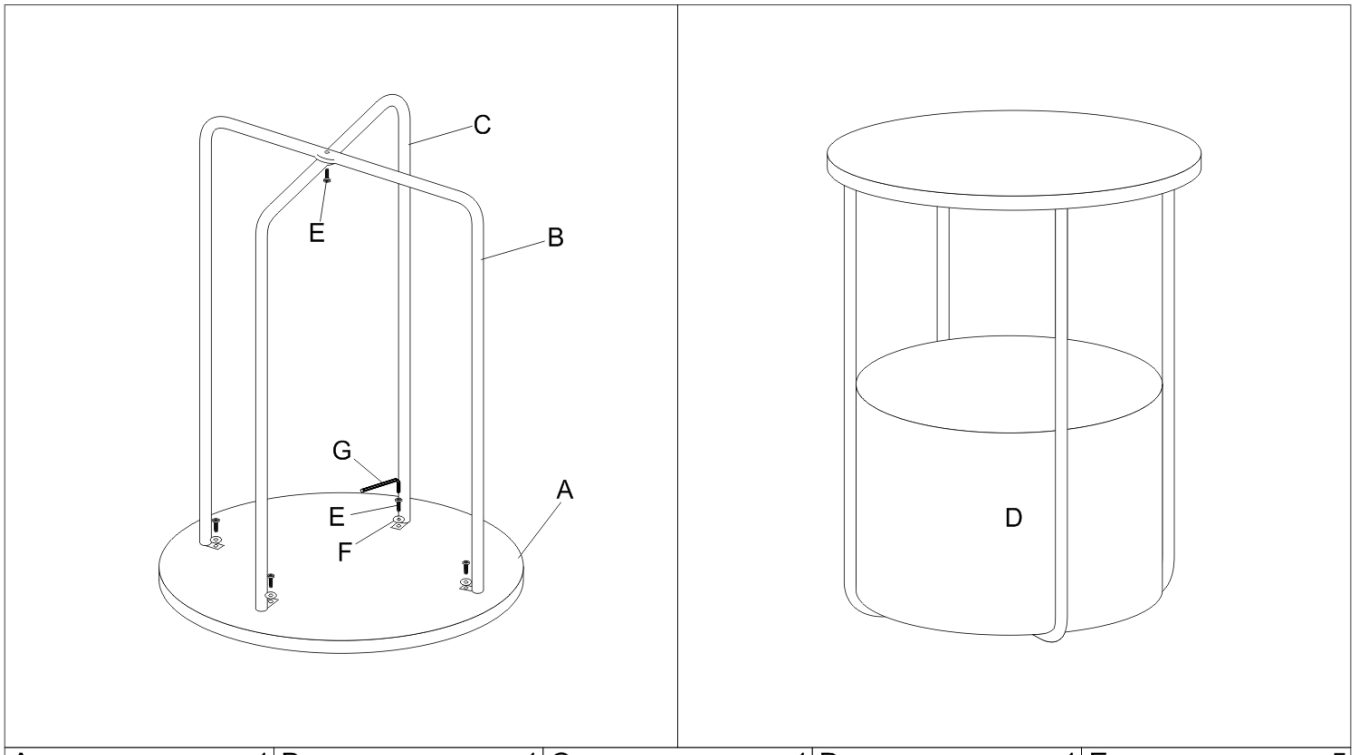

A x1	B x1	C x1	D x1	E x5
F x4	G x1			