370-000043



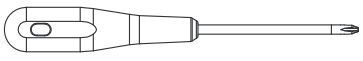

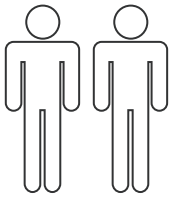

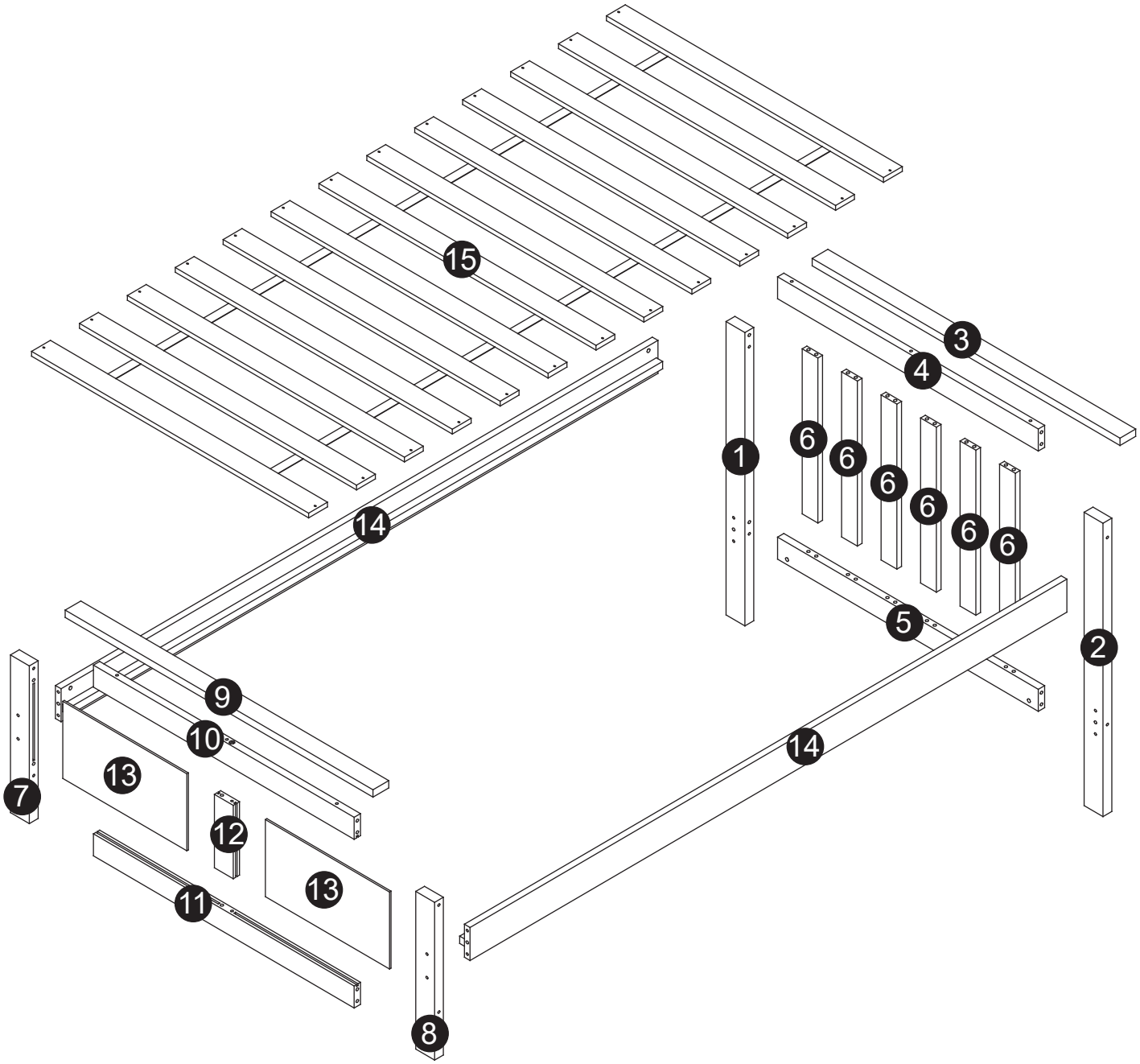

Ax3 M6x70mm	Bx8 M6x80mm	Cx4 M6x100mm	Dx6 M6x110mm	Ex12	Fx38 ∅8x30mm
Gx3	Hx3	Ix1	Jx26 M4x30mm		

01

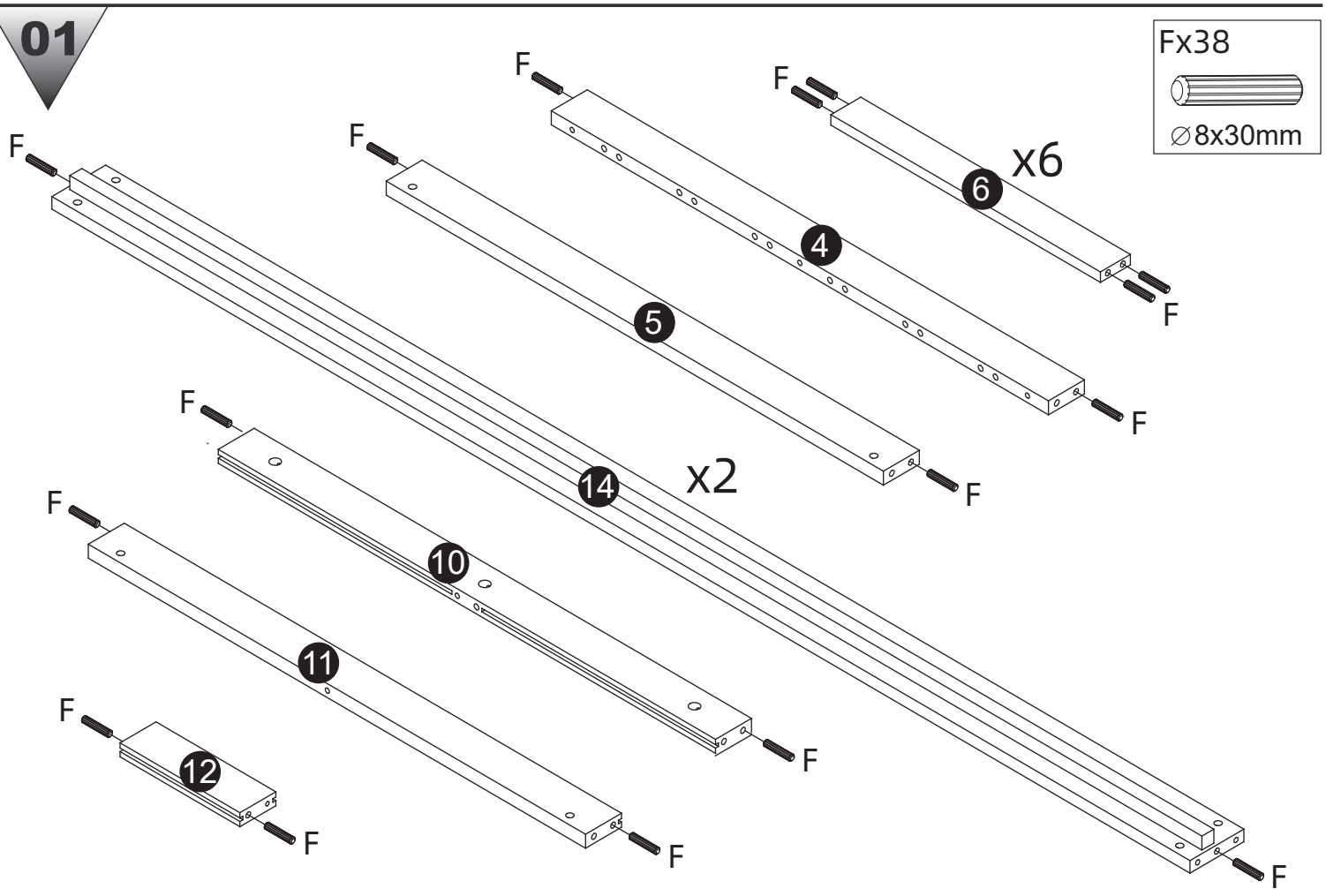

02

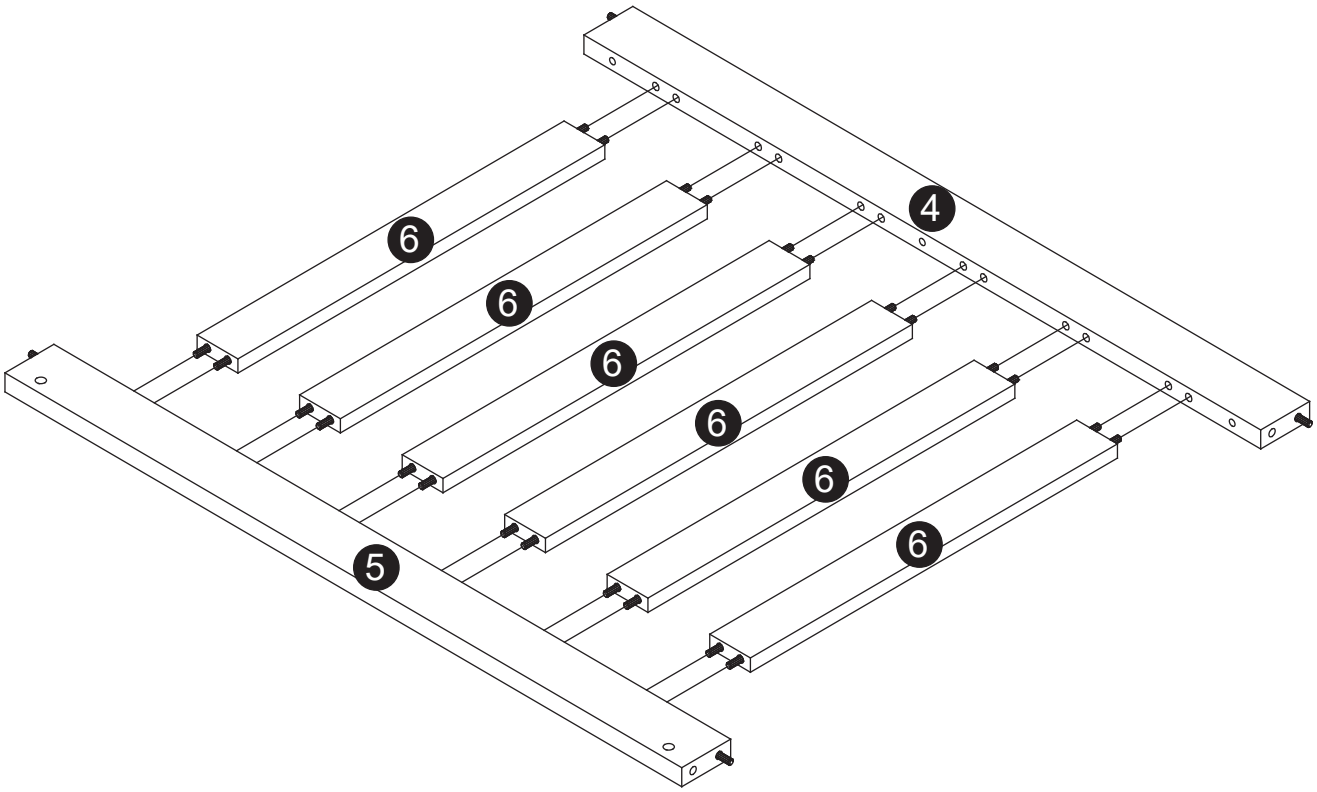

03

Cx2	Dx2	Ex2
M6x100mm	M6x110mm	

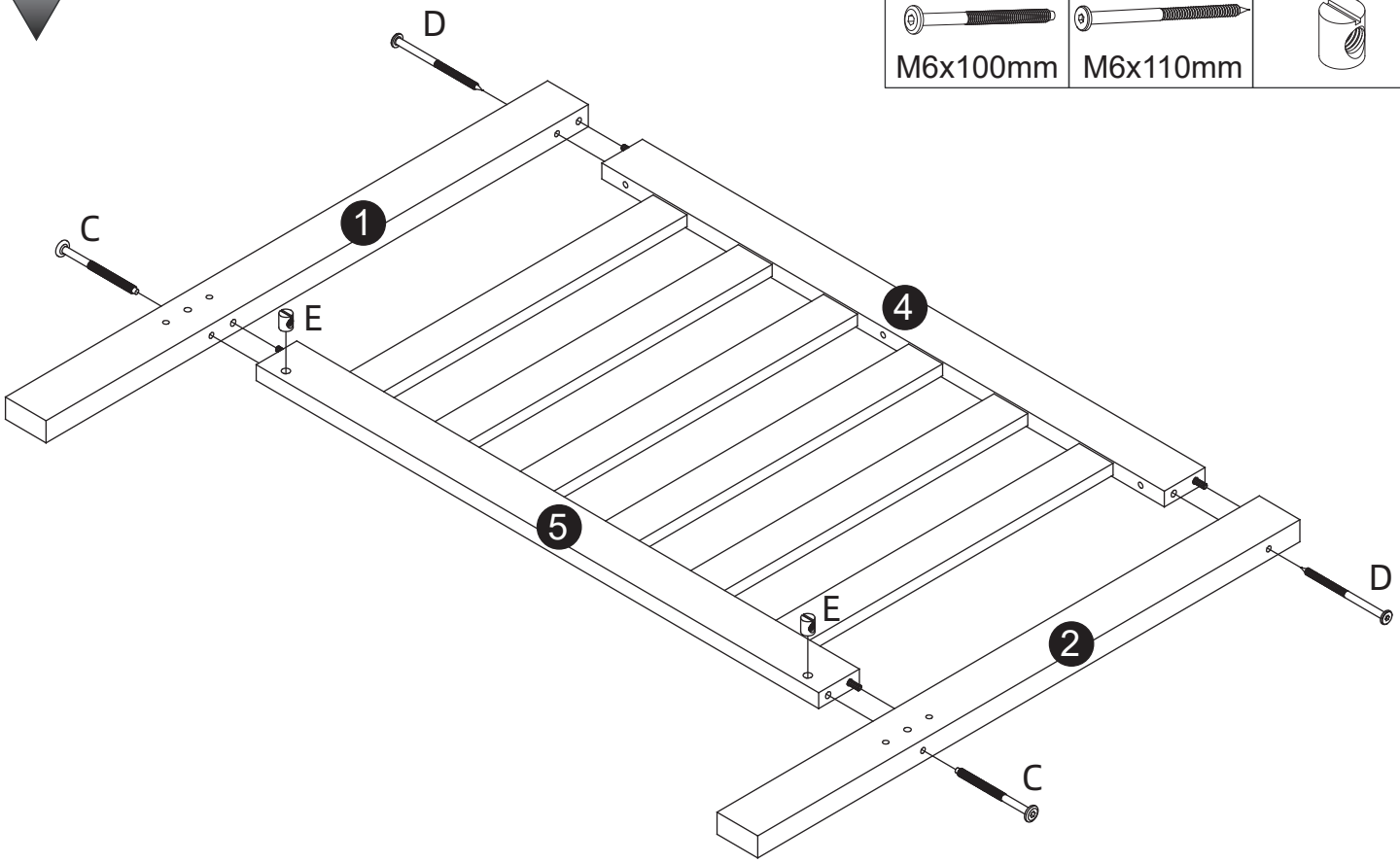

04

Ax3
M6x70mm

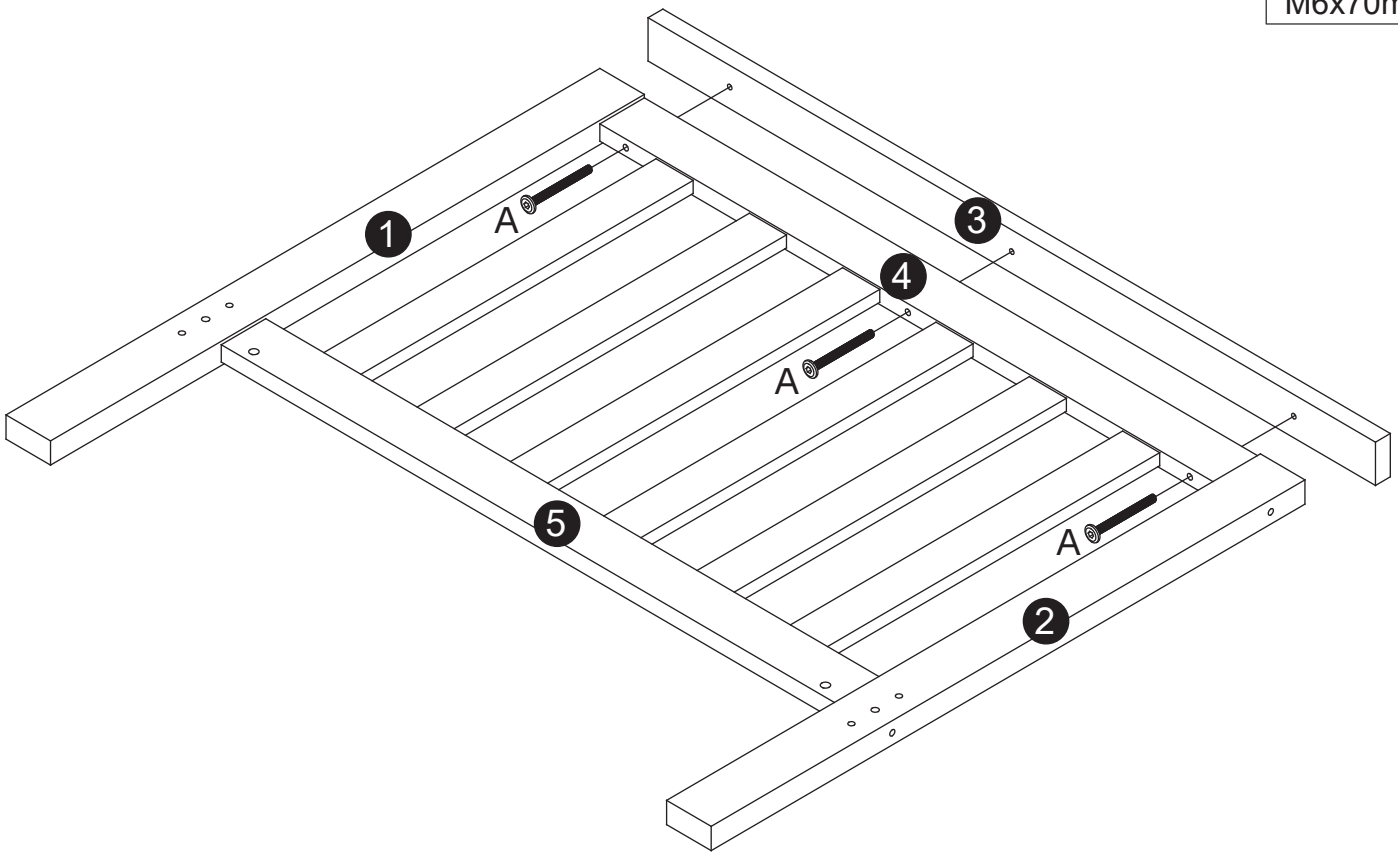

05

Dx2



M6x110mm

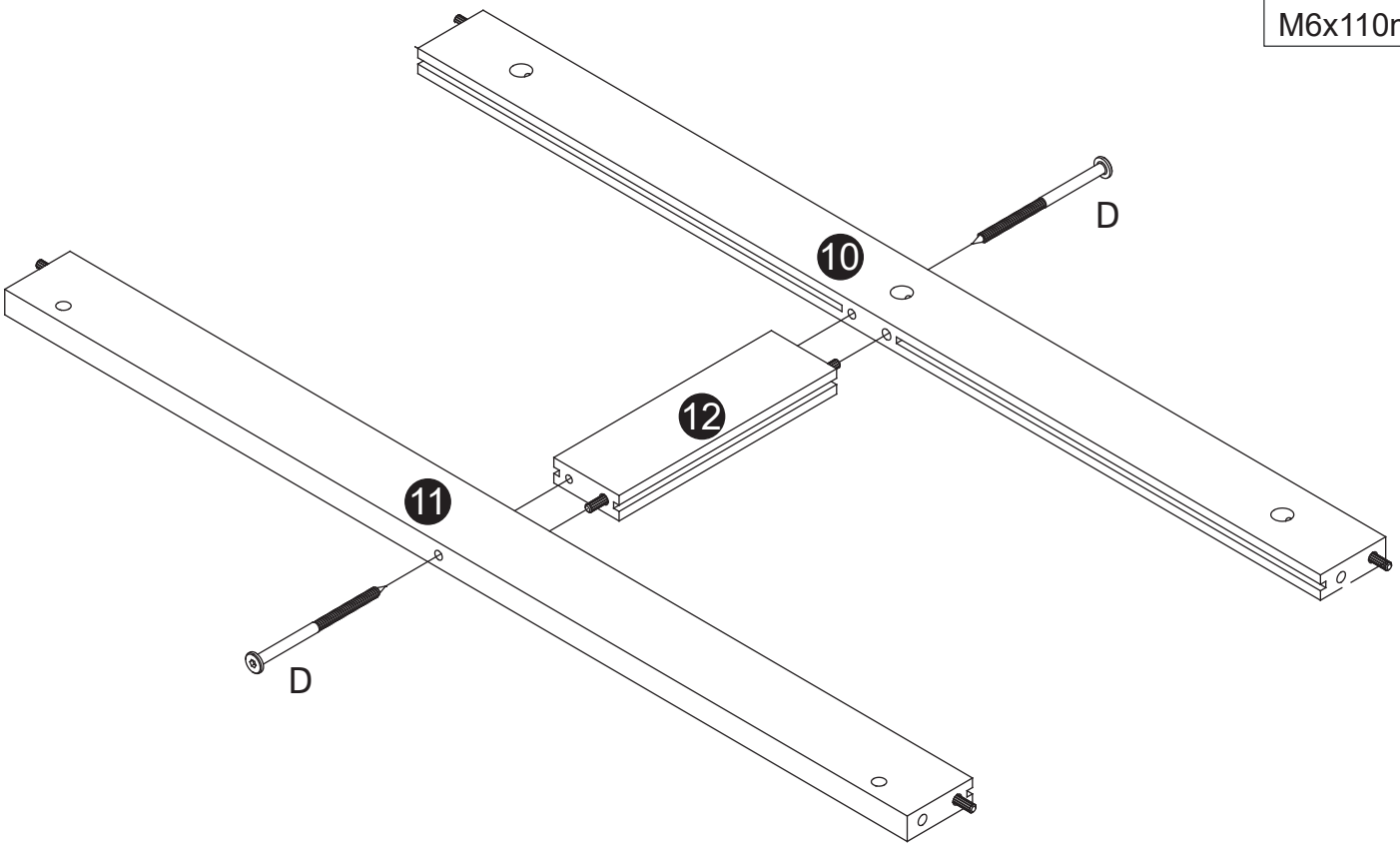

06

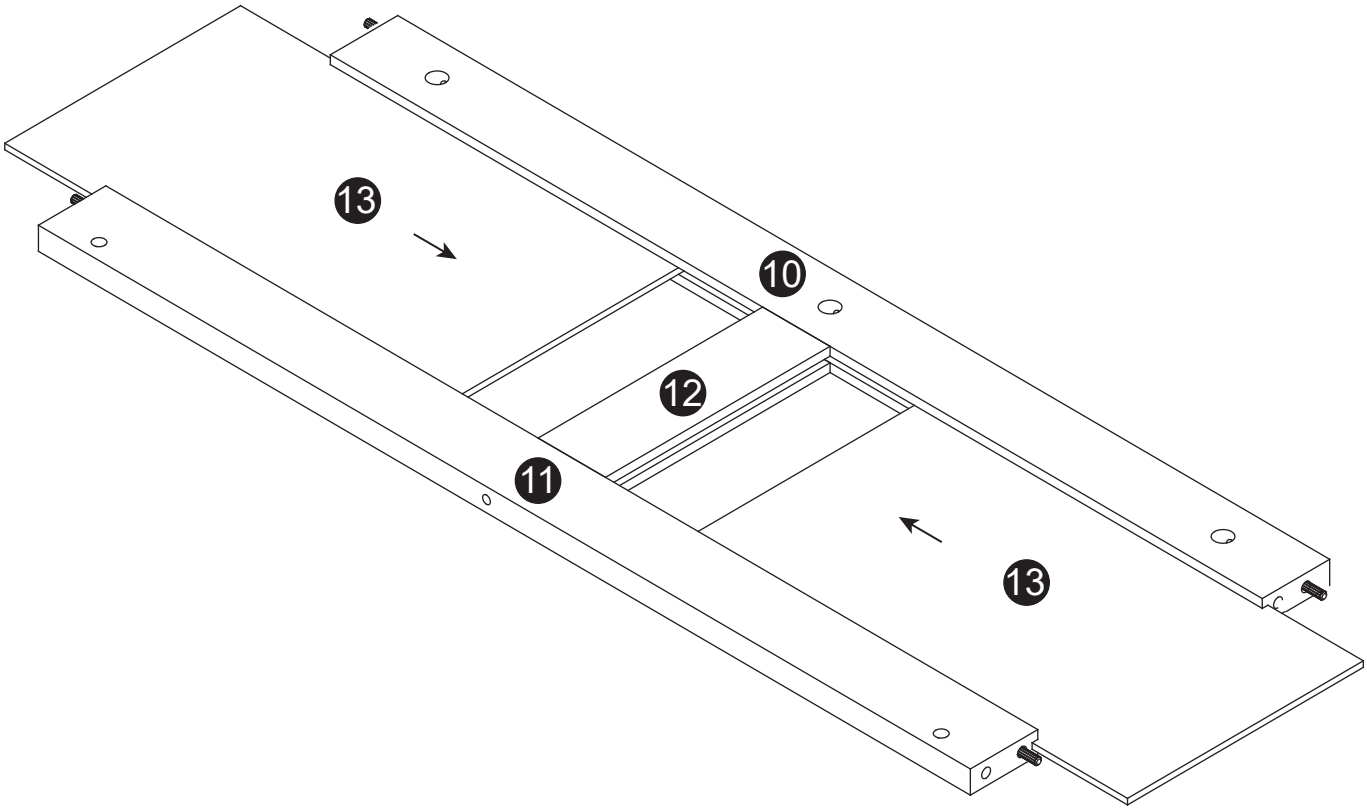

07

Cx2	Dx2	Ex2
 M6x100mm	 M6x110mm	

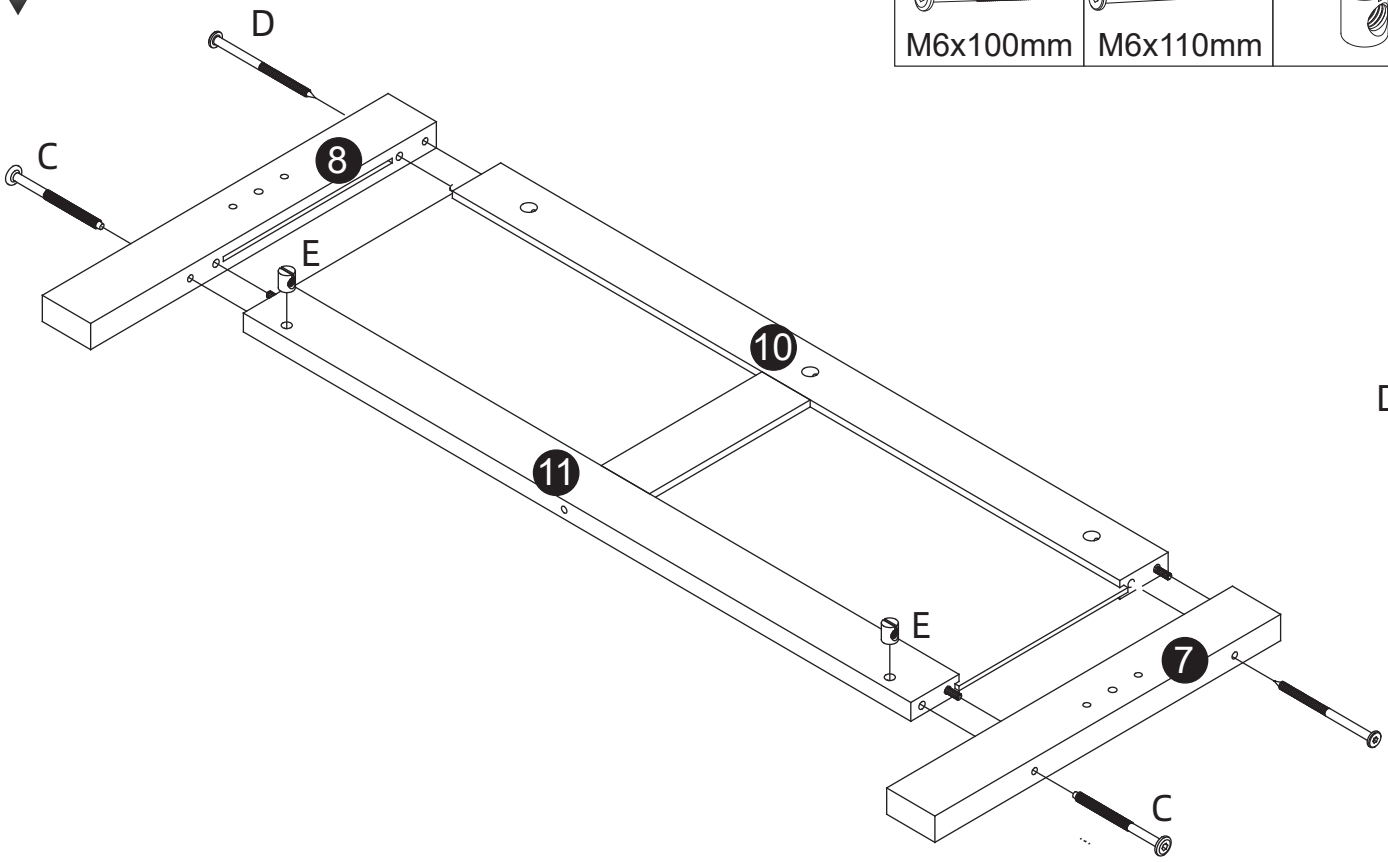

D

08

Gx3
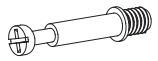

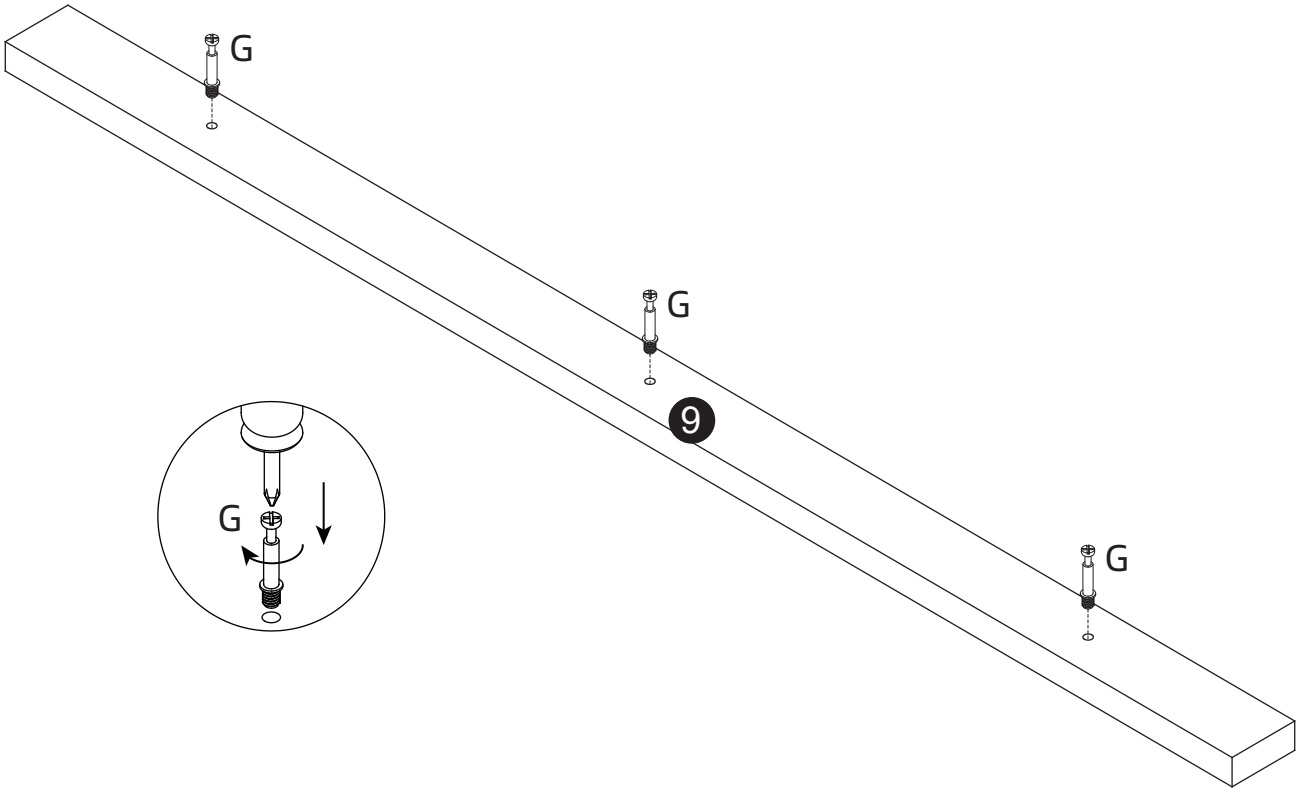

09

Hx3

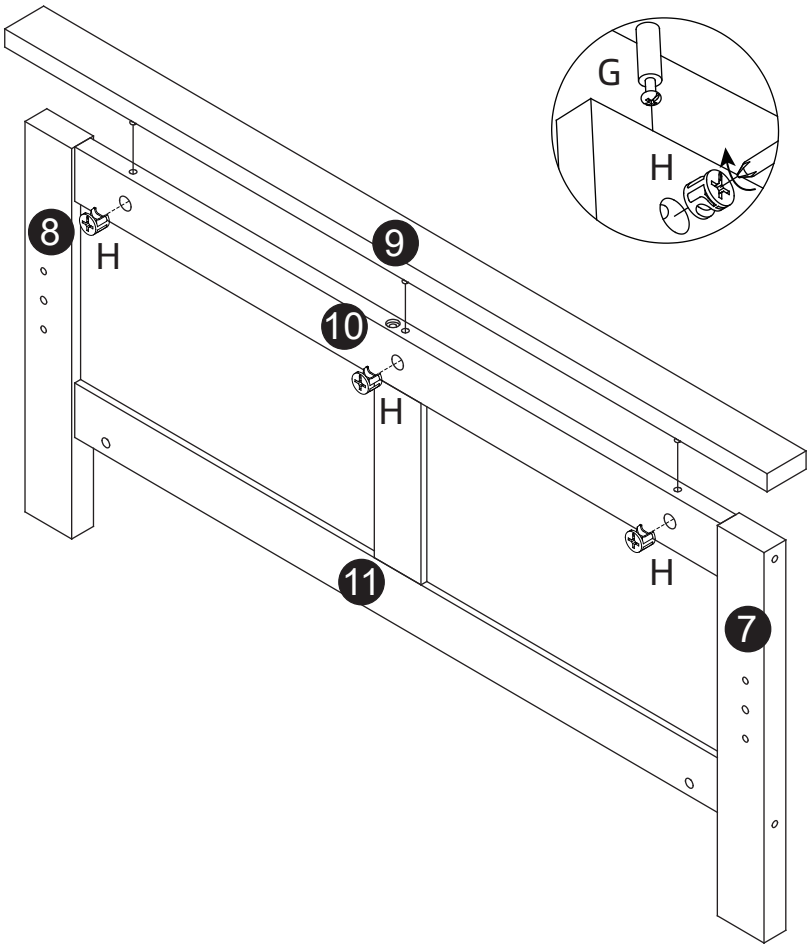

10

Bx8	Ex8
M6x80mm	

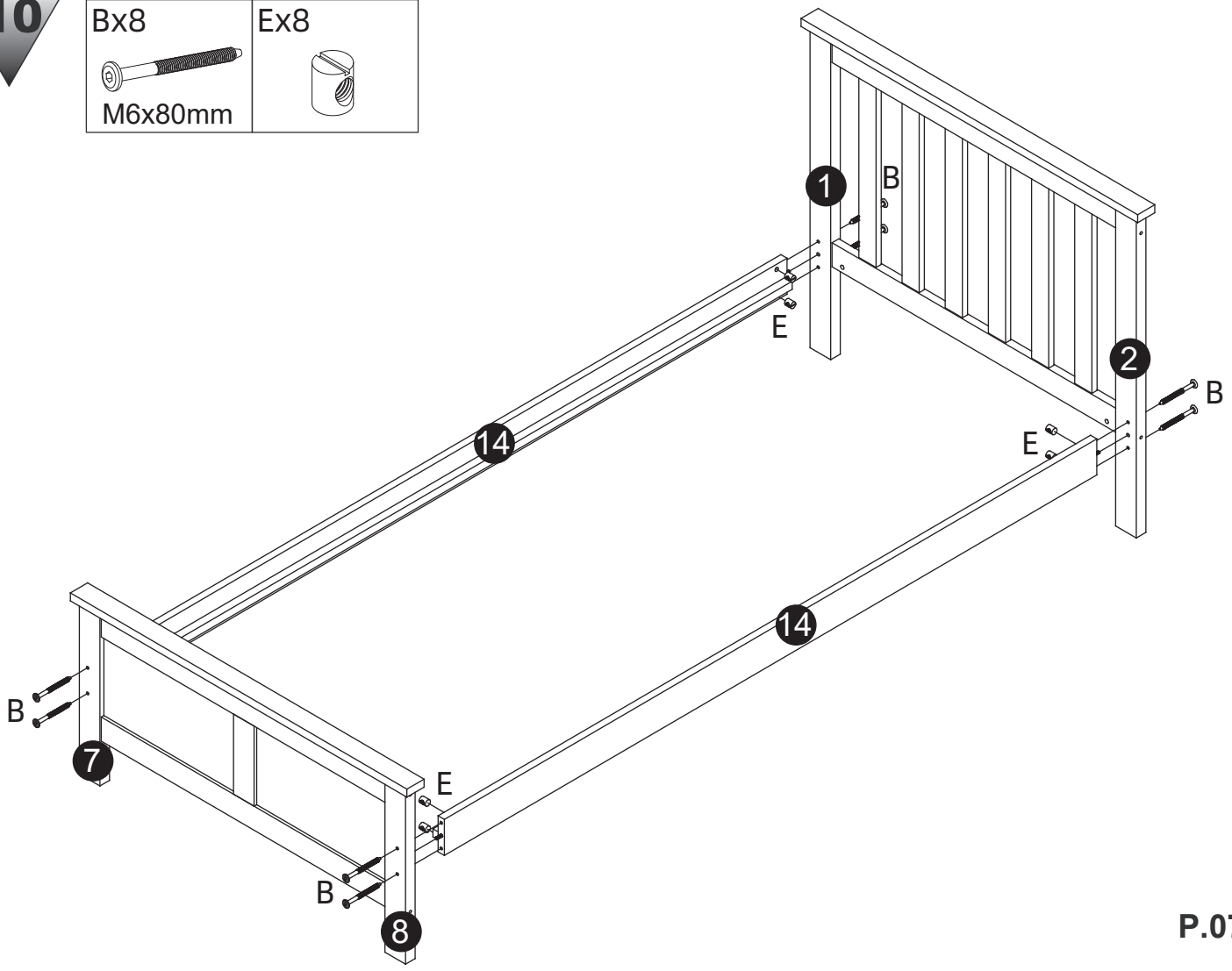

11

Jx26



M4x30mm

