Assembly Drawing

pakketo

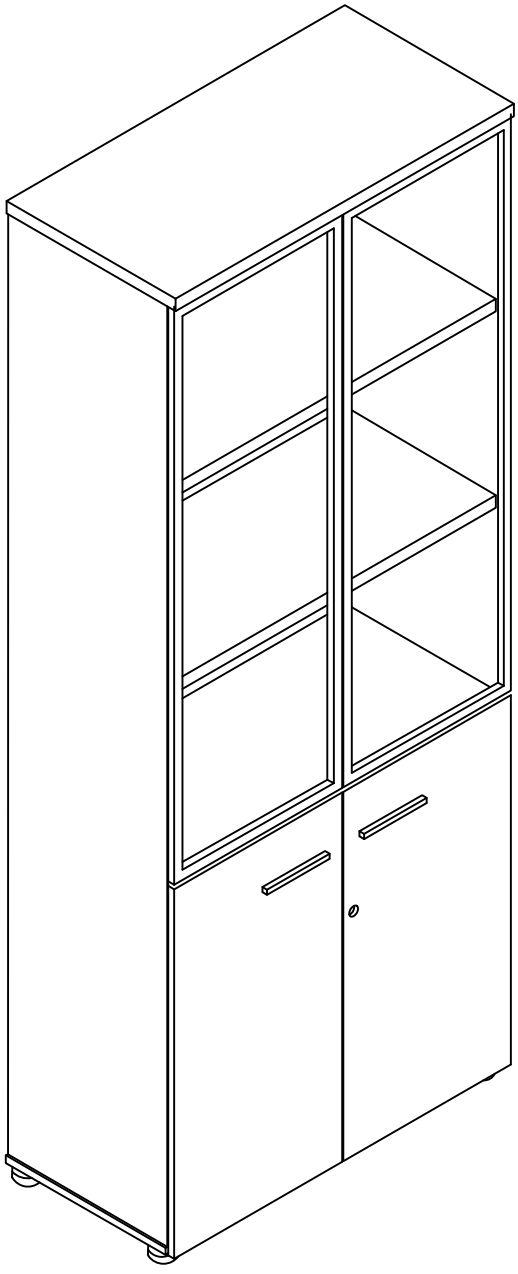

367-000022

Parts list

TOOLS

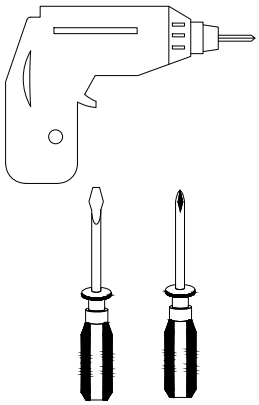

A X44

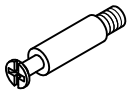

B X44



C X4 128V



D X4 4*18



E X4 MX

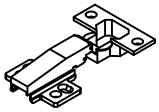

F X6 LX

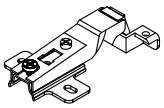

G X1



H X2

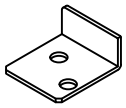

I X1

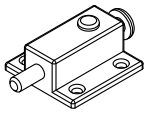

J X4 4*25



K B X4 50*30H



L X16 3.5*20



M X68 3.5*14



No:	Specificatino(W*D*H)	QTY
①	766*358*25	4
②	1930*766*15	1
③	1930*376*15	1
④	1930*376*15	1
⑤	800*400*25	1
⑥	800*376*15	1
⑦	1185*397*15	2
⑧	756*397*15	2

STEP:1

A

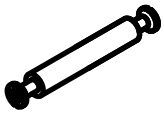

X8

B



X8

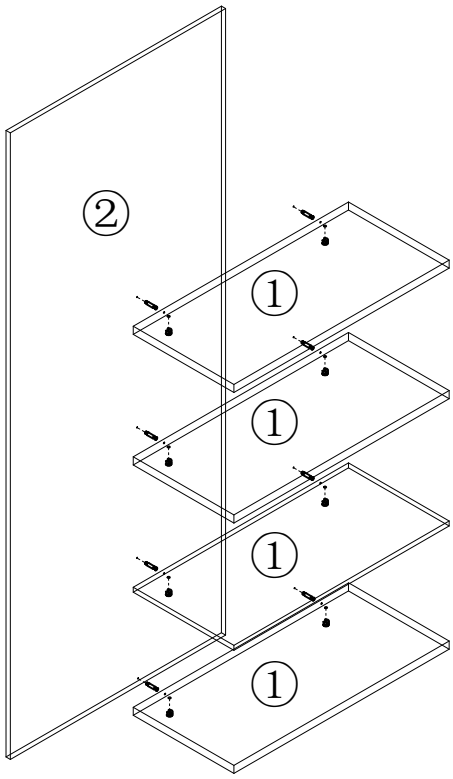

STEP:2

A

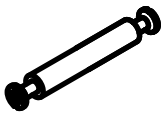

X24

B



X24

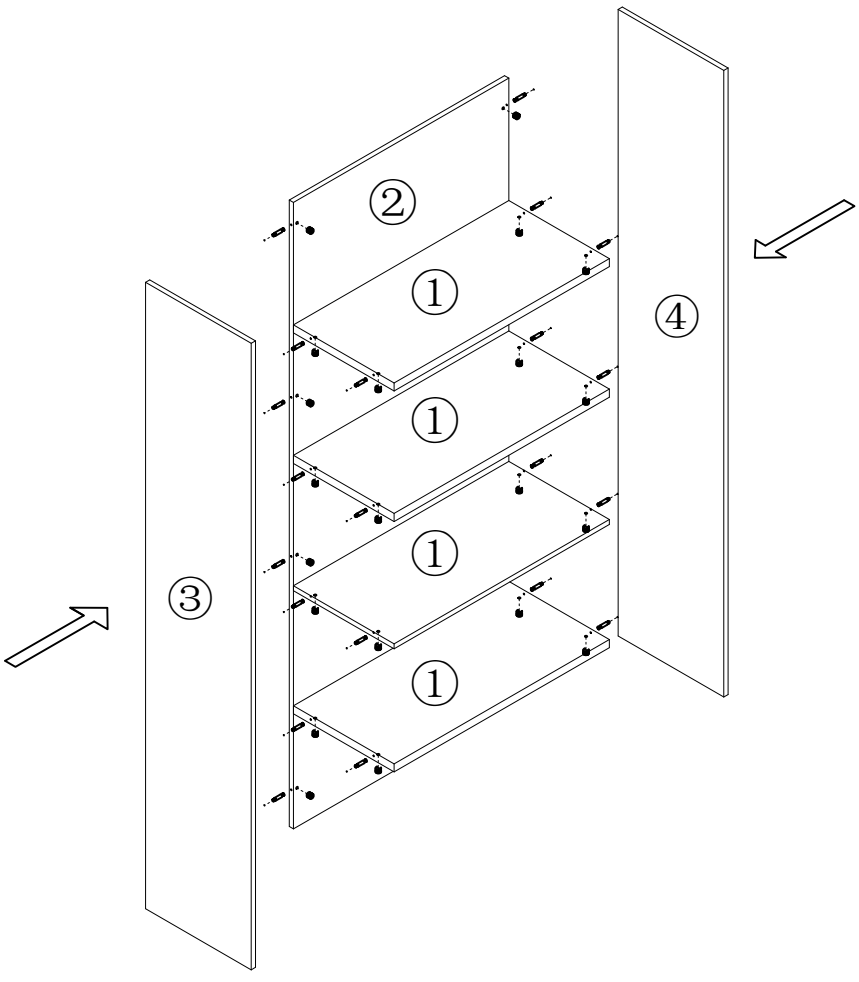

STEP:3

A

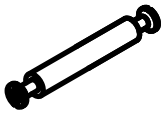

X12

B



X12

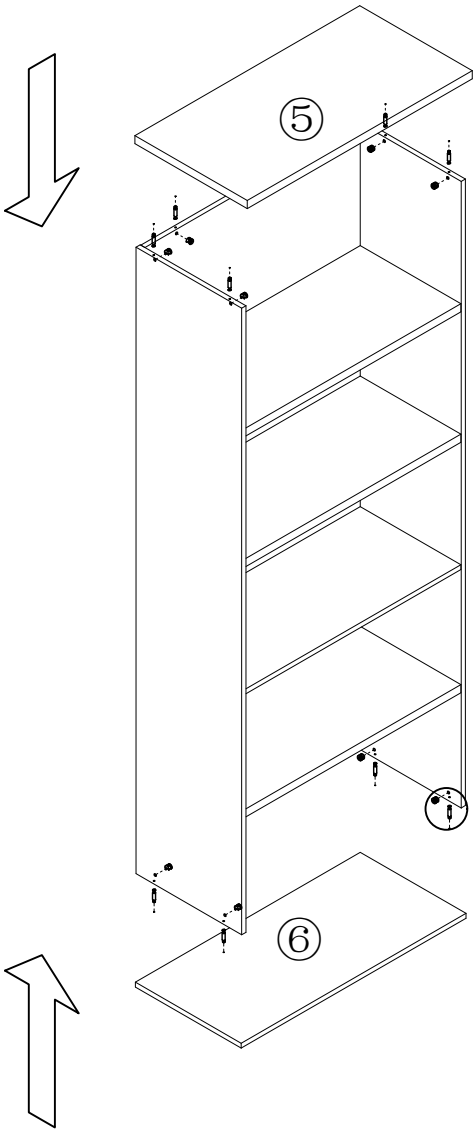

STEP:4

K



X4 50*30H

L



X12 3.5*20

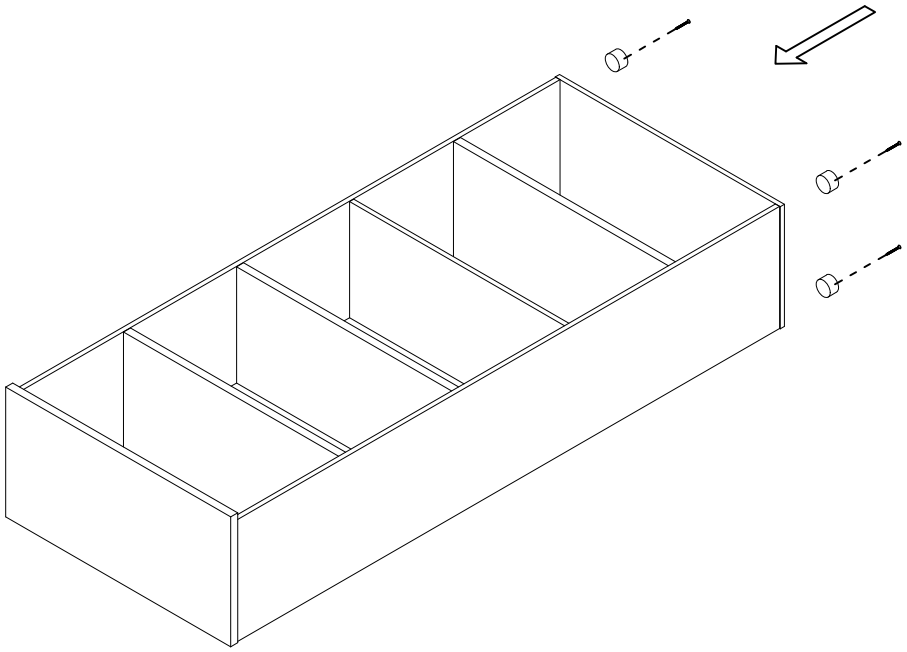

STEP:5

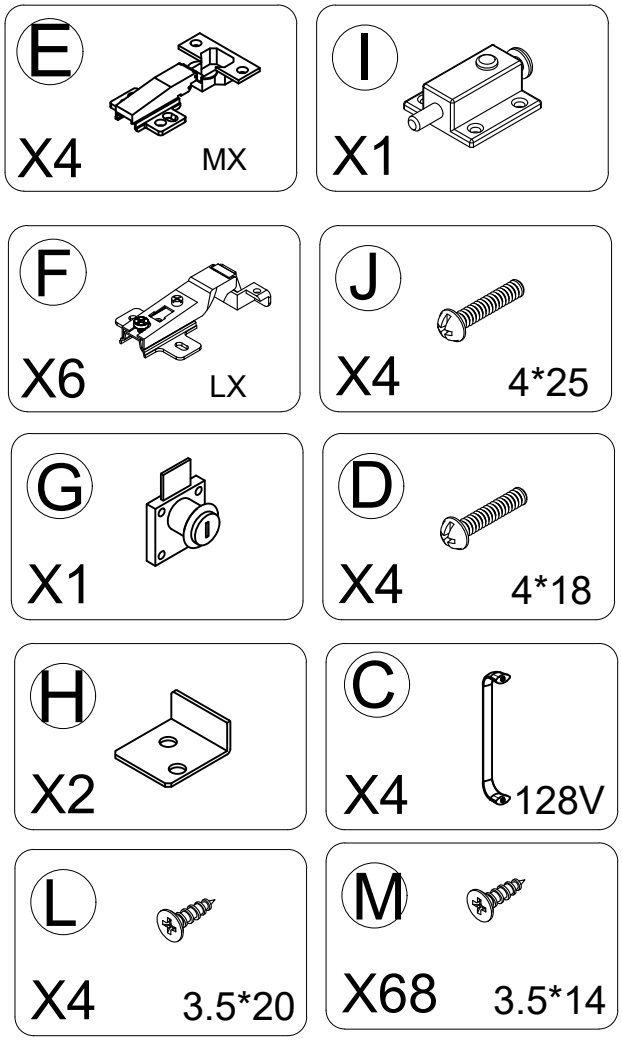
E
X4
MX
I
X1
F
X6
LX
J
X4
4*25
G
X1
D
X4
4*18
H
X2
C
X4
128V
L
X4
3.5*20
M
X68
3.5*14

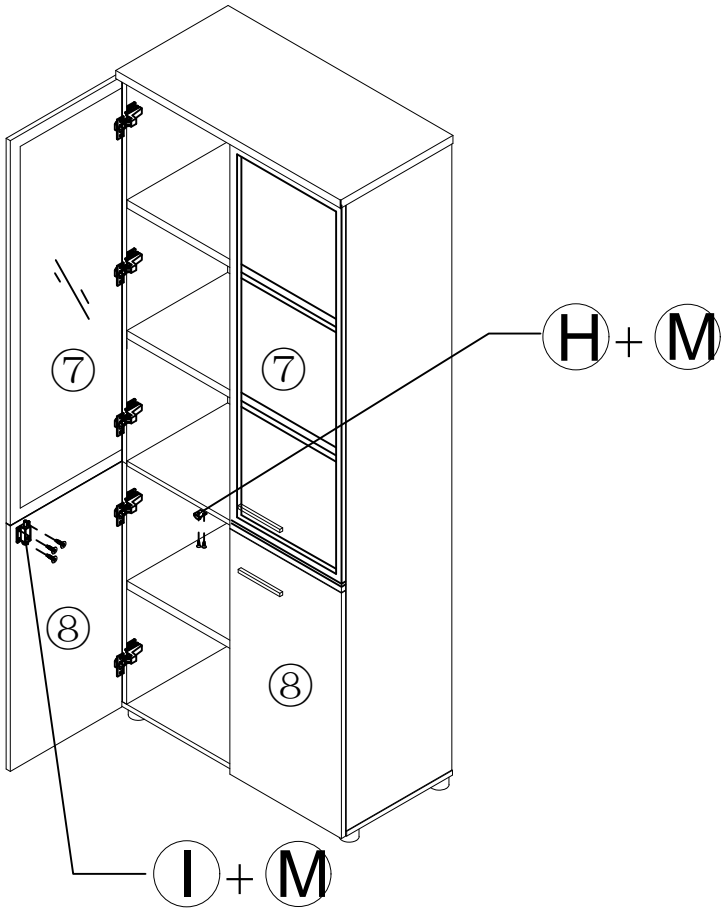
7
7
8
8
H + M
I + M

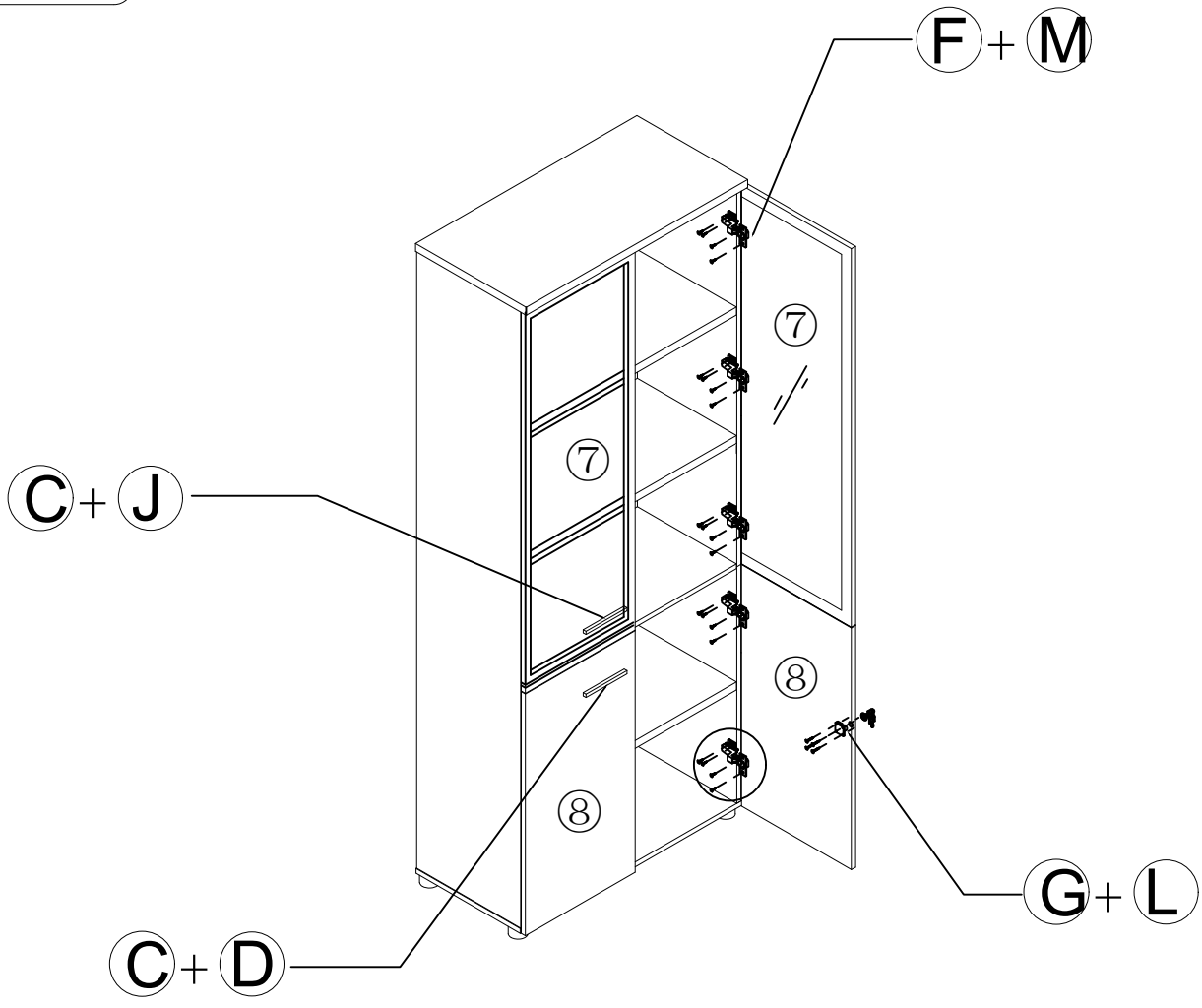
F + M
7
7
8
8
C + J
C + D
G + L

FINISH

