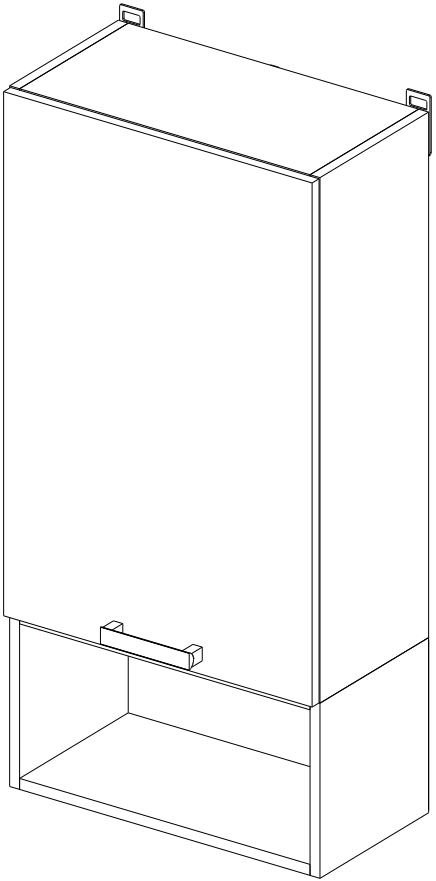

361-000099

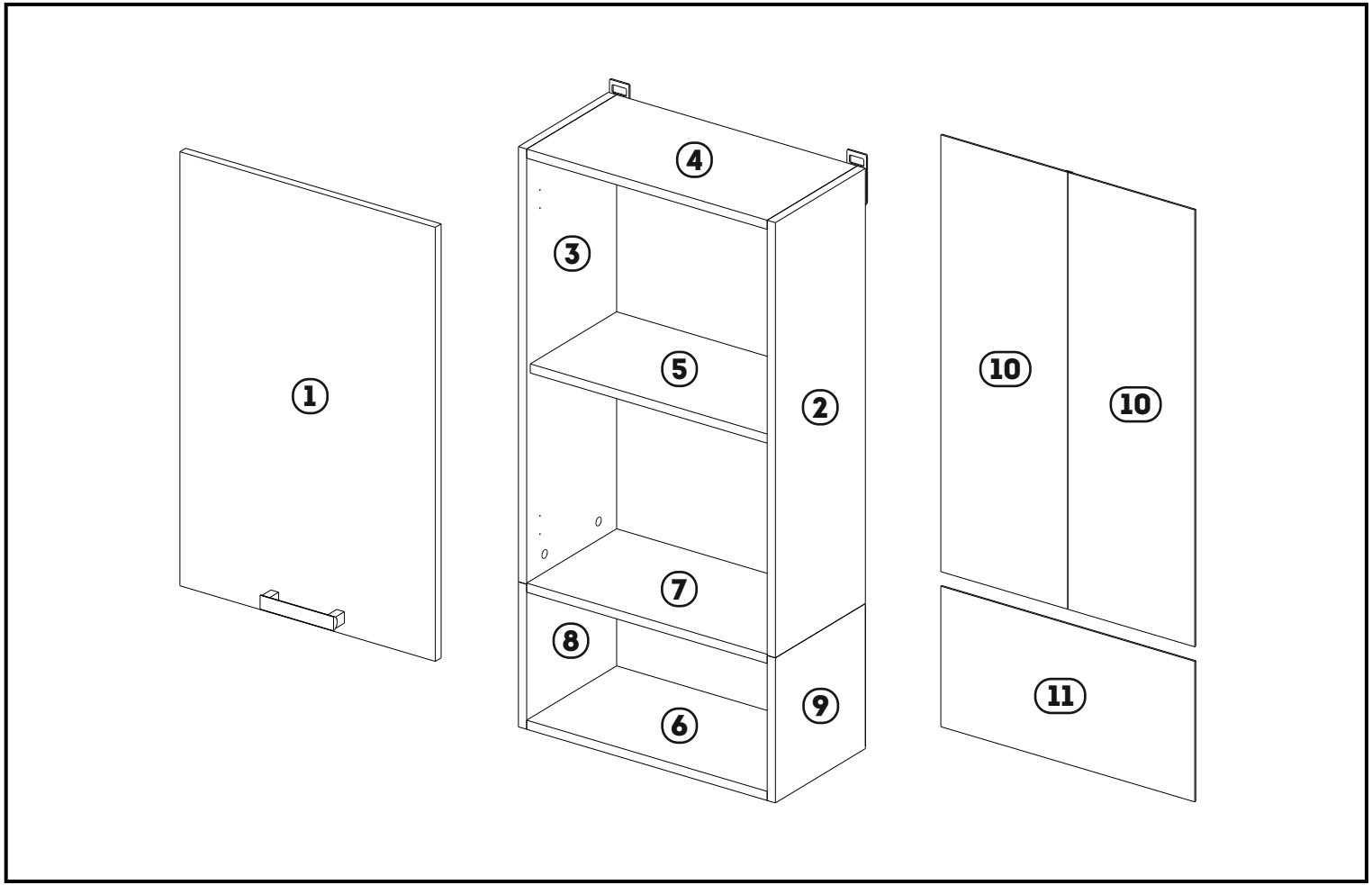
1
2
3
4
5
6
7
8
9
10
10
11

№	a*b	X	Pack
1	763x497	1	1/1
2	765x250	1	1/1
3	765x250	1	1/1
4	468x250	1	1/1
5	468x240	1	1/1
6	468x250	1	1/1
7	468x250	1	1/1
8	255x250	1	1/1
9	255x250	1	1/1
10	768x247	2	1/1
11	248x496	1	1/1

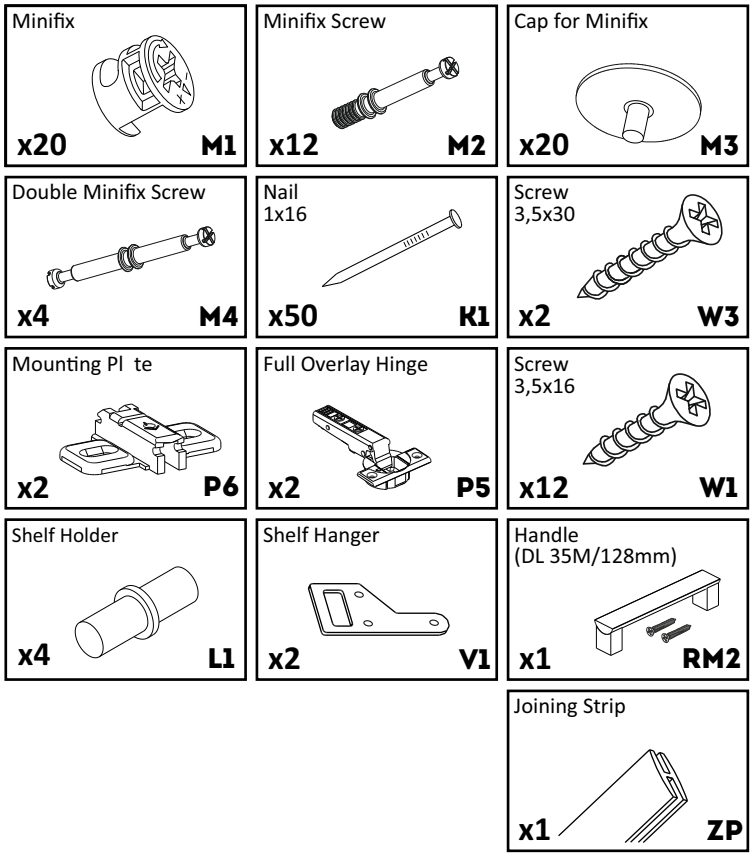

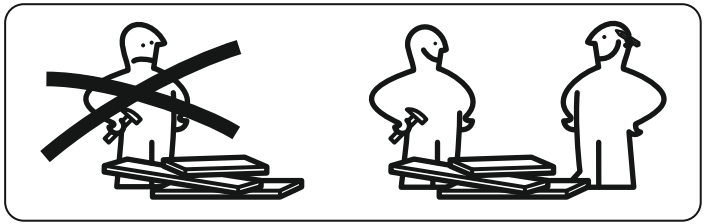

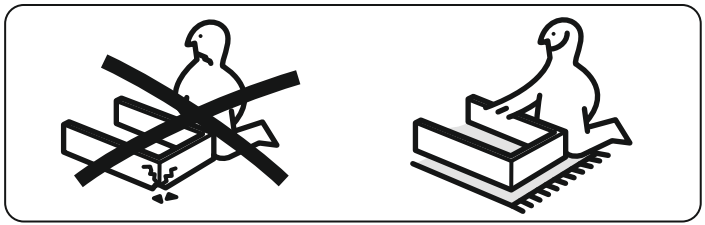

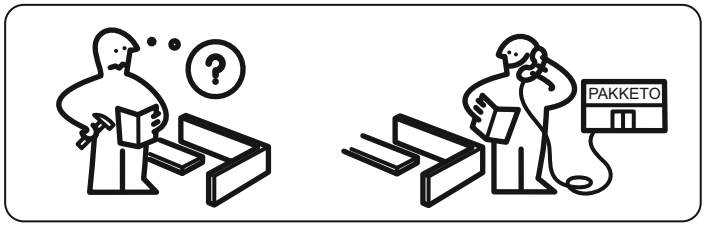

GENERAL TECHNICAL INSTRUCTIONS FOR FURNITURE ASSEMBLY

- CHECK COMPATIBILITY OF PARTS AND ACCESSORIES BEFORE ASSEMBLY.
- FOR FURNITURE ASSEMBLY, WE RECOMMEND USING THE SERVICES OF QUALIFIED SPECIALISTS.
- DO ASSEMBLY ON A SURFACE COVERED WITH CLOTH OR CARDBOARD TO PREVENT SCRATCHES.

CARE AND MAINTENANCE OF FURNITURE

- KEEP THE FURNITURE FROM PROLONGED CONTACT WITH WATER OR HOT STEAM.
- ENSURE SUFFICIENT DISTANCE FROM ELECTRICAL APPLIANCES AND HEATERS.
- IF THERE IS DIRTY ON THE FURNITURE, REMOVE IT WITH A DAMP CLOTH AND THEN WIPE IT DRY. DO NOT USE ABRASIVE MATERIALS.

1

Minifix

x8 M1

Screw
3,5x16

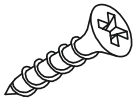

x4 W1

Mounting Pl te

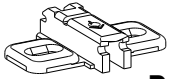

x2 P6

Shelf Holder

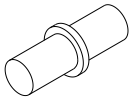

x4 L1

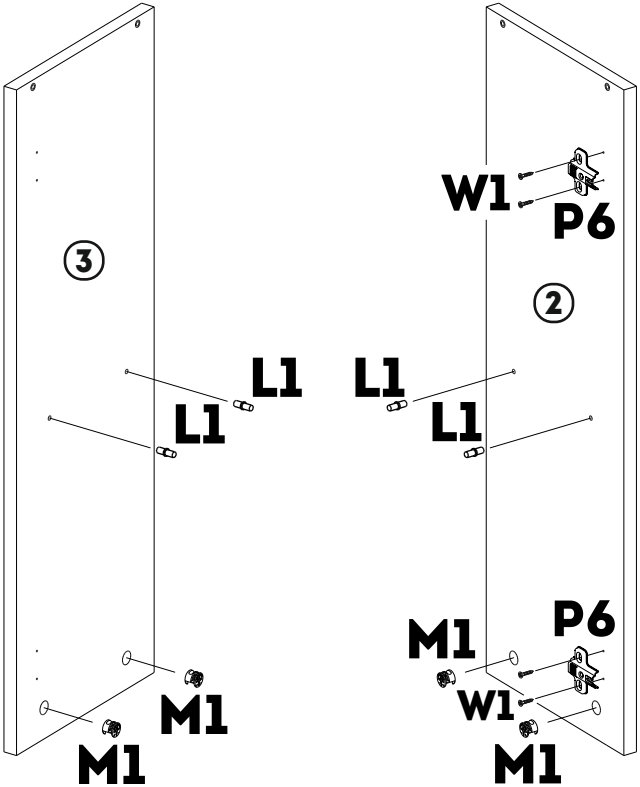

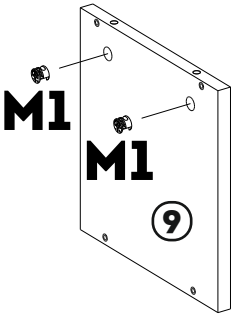

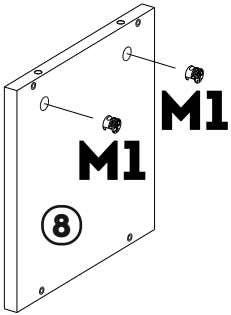

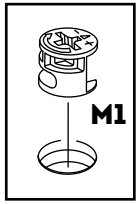

2

Minifix

x12 M1

Minifix Screw

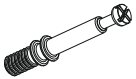

x12 M2

Double Minifix Screw

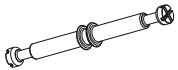

x4 M4

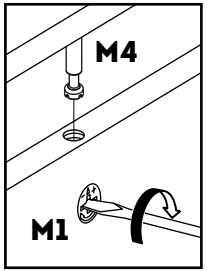

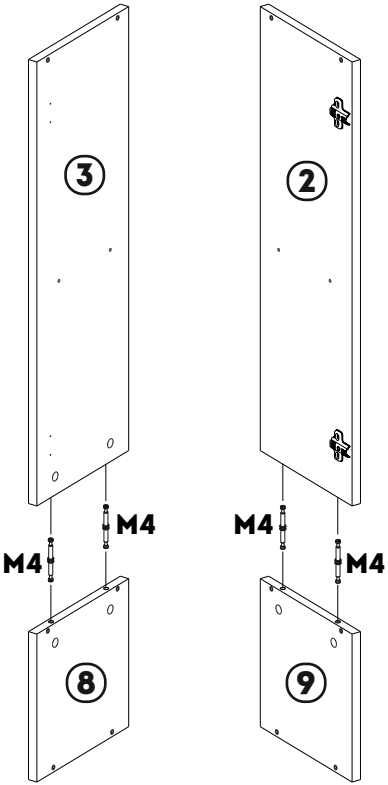

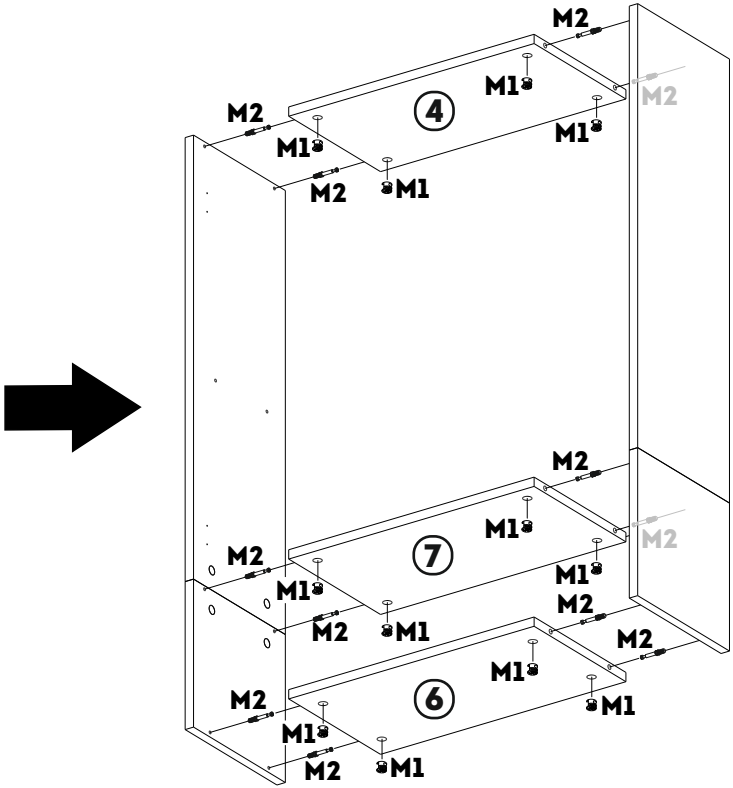

3

Nail
1x16

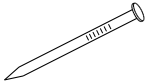

x50 K1

Joining Strip

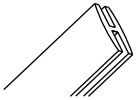

x1 ZP

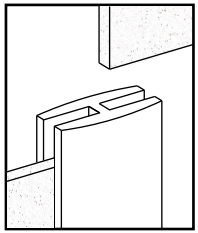

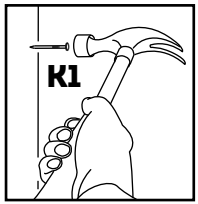

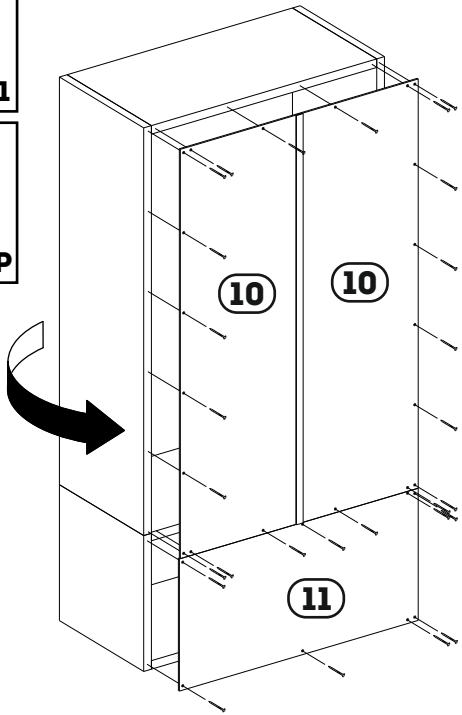

4

Screw
3,5x30

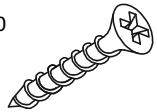

x2 W3

Screw
3,5x16

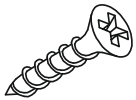

x4 W1

Shelf Hanger

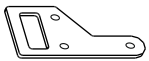

x2 V1

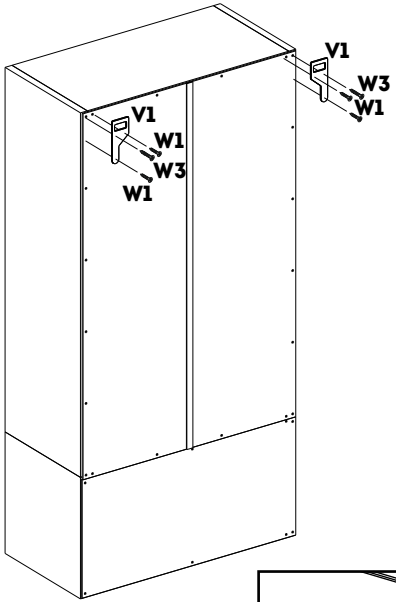

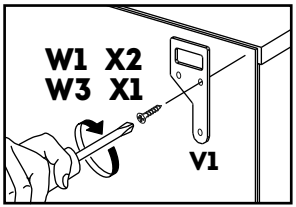

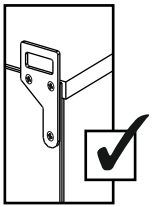

5

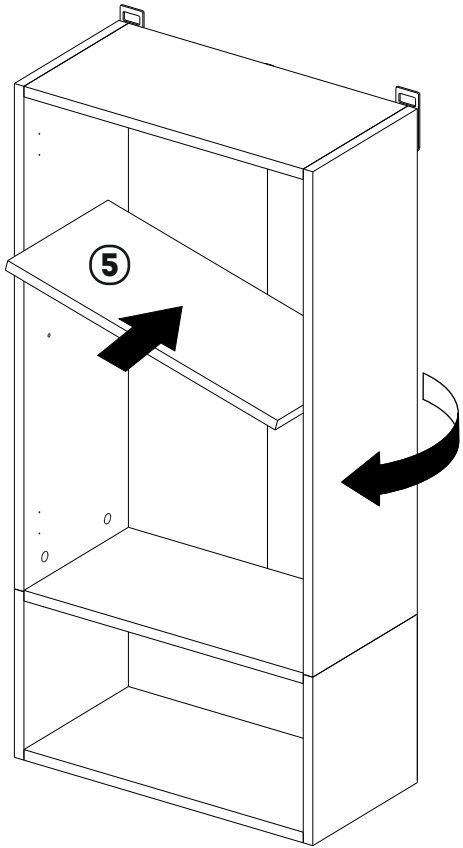

6

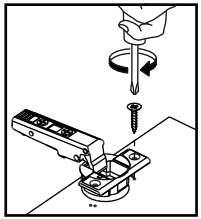

Full Overlay Hinge

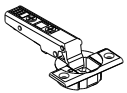

x2 P5

Screw
3,5x16

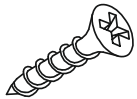

x4 W1

Handle
(DL 35M/128mm)

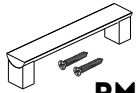

x1 RM2

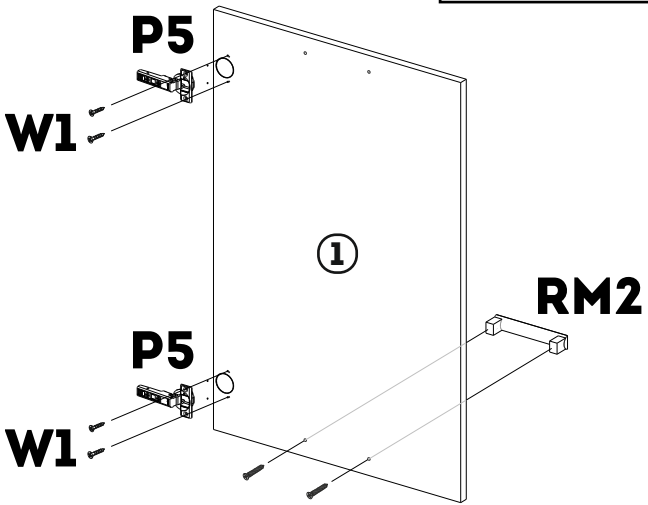

7

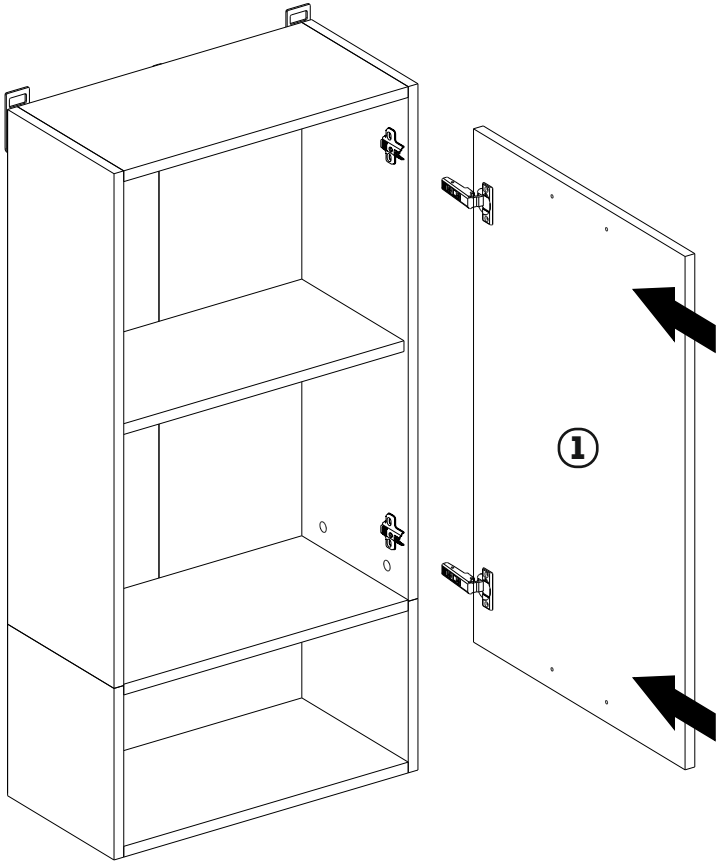

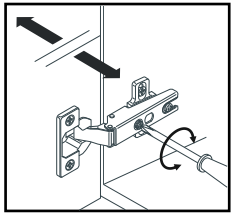

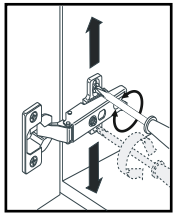

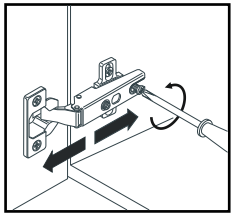

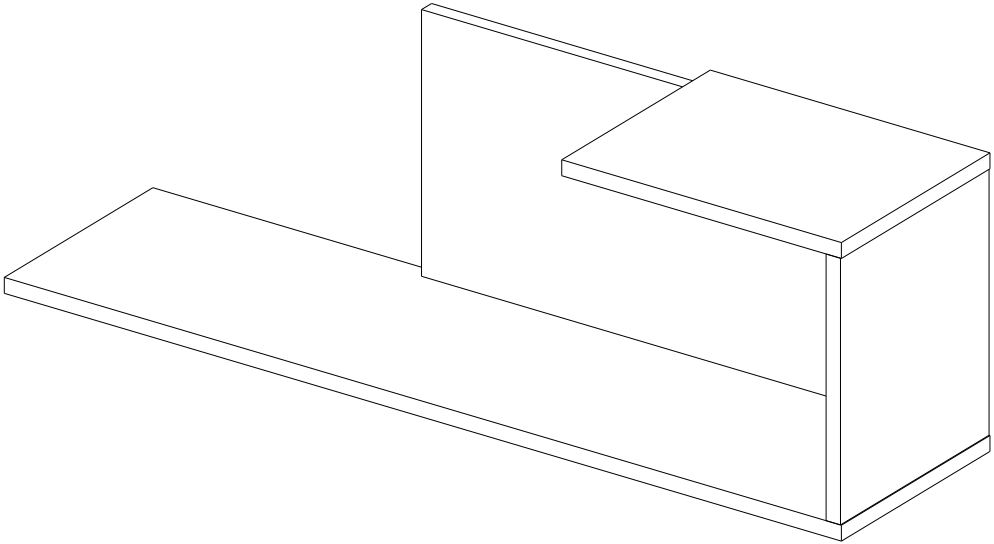

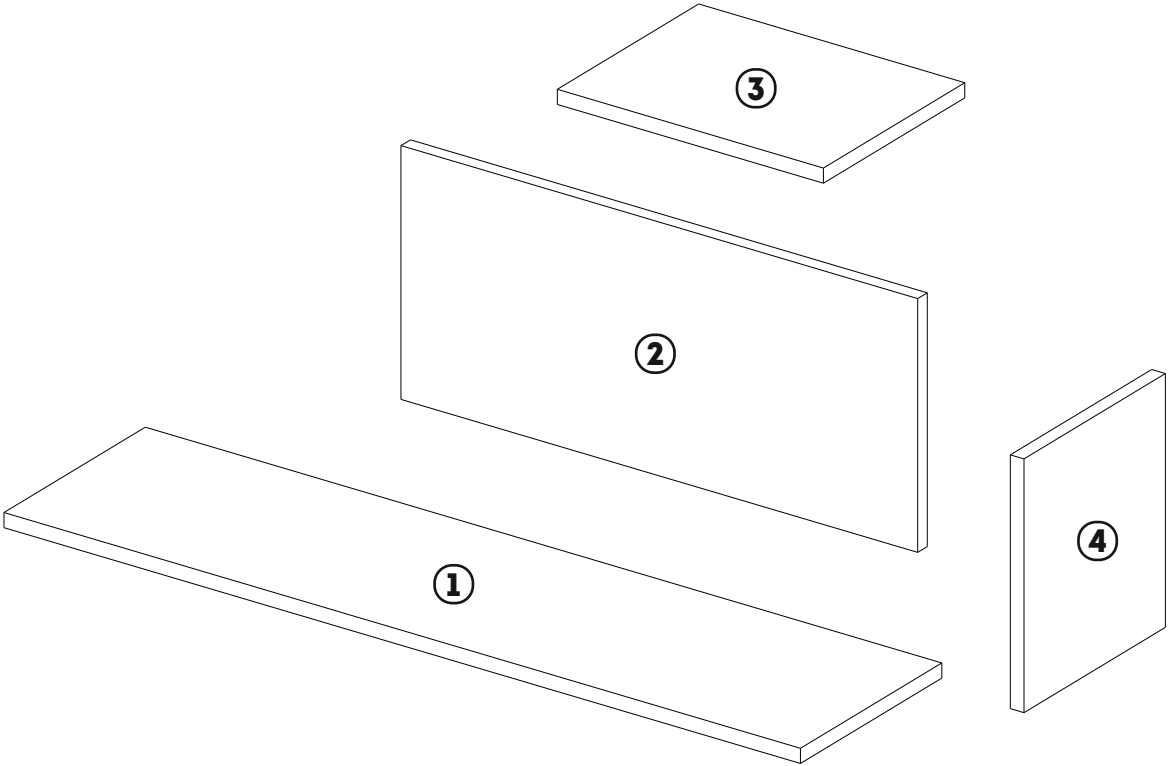
3
2
4
1

№	a*b	X	Pack
1	931x236	1	1/1
2	604x268	1	1/1
3	311x236	1	1/1
4	268x236	1	1/1

Minifix

x11 M1

Minifix Screw

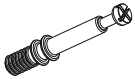

x11 M2

Cap for Minifix

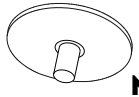

x11 M3

Screw
3,5x16

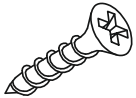

x4 W1

Screw
3,5x30

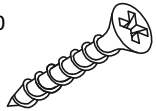

x2 W3

Shelf Hanger

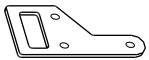

x2 V1

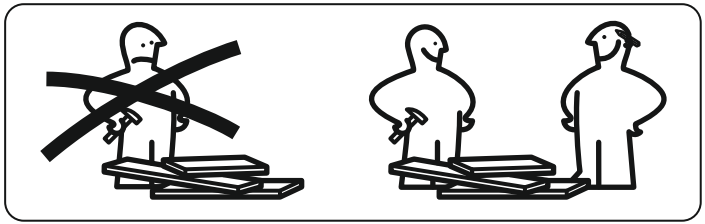

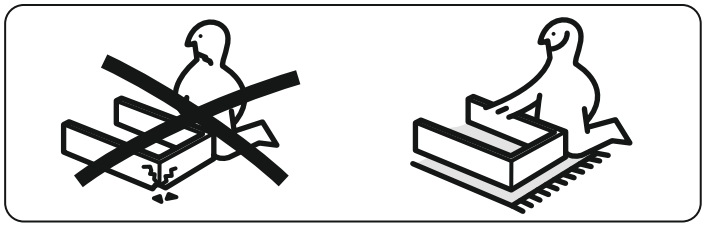

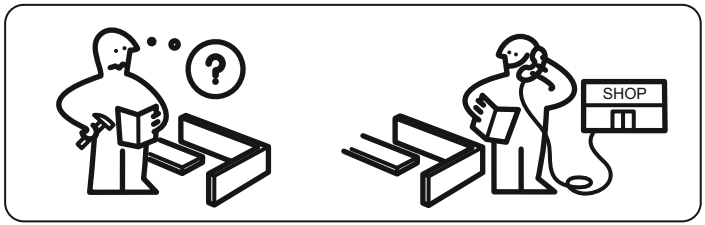

GENERAL TECHNICAL INSTRUCTIONS FOR FURNITURE ASSEMBLY

- CHECK COMPATIBILITY OF PARTS AND ACCESSORIES BEFORE ASSEMBLY.
- FOR FURNITURE ASSEMBLY, WE RECOMMEND USING THE SERVICES OF QUALIFIED SPECIALISTS.
- DO ASSEMBLY ON A SURFACE COVERED WITH CLOTH OR CARDBOARD TO PREVENT SCRATCHES.

CARE AND MAINTENANCE OF FURNITURE

- KEEP THE FURNITURE FROM PROLONGED CONTACT WITH WATER OR HOT STEAM.
- ENSURE SUFFICIENT DISTANCE FROM ELECTRICAL APPLIANCES AND HEATERS.
- IF THERE IS DIRTY ON THE FURNITURE, REMOVE IT WITH A DAMP CLOTH AND THEN WIPE IT DRY. DO NOT USE ABRASIVE MATERIALS.

1

Minifix	Screw 3,5x16	Screw 3,5x30	Shelf Hanger
	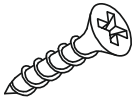	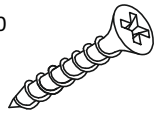	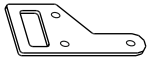
x11 M1	x4 W1	x2 W3	x2 V1

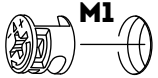

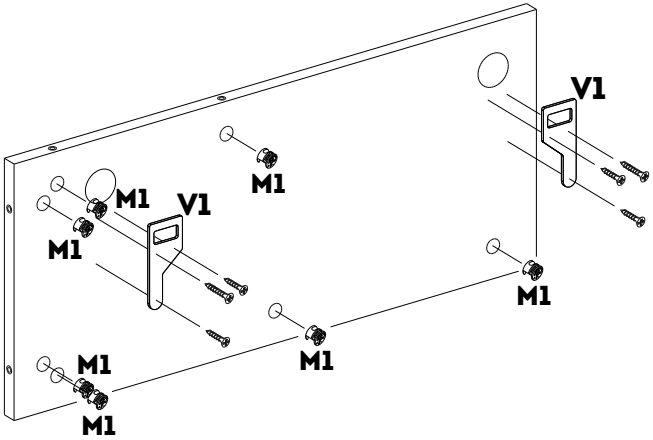

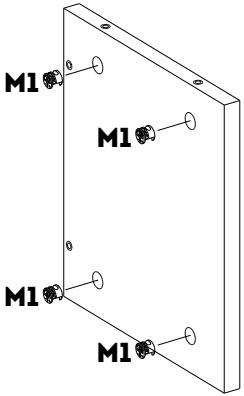

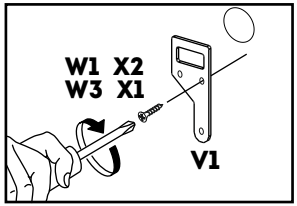

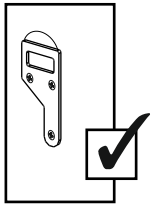

2

Minifix Screw

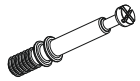

x2 M2

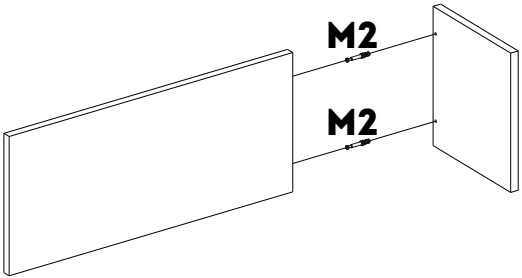

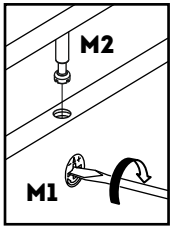

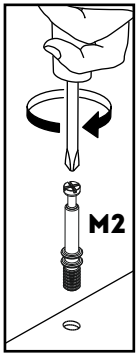

3

Minifix Screw

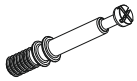

x9 M2

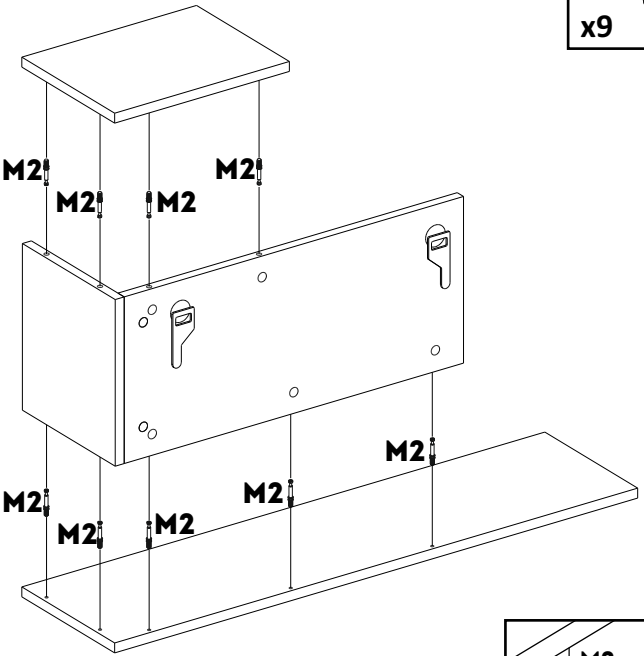

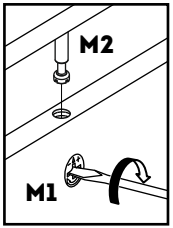

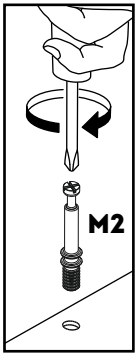

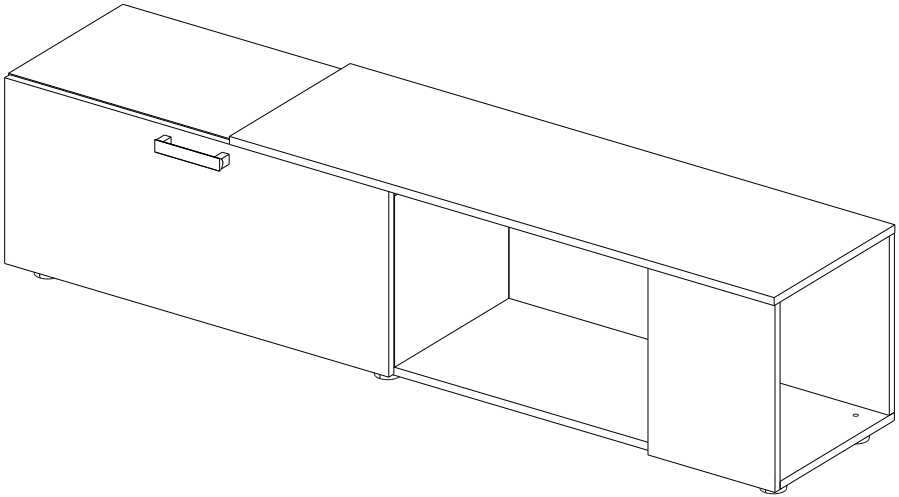

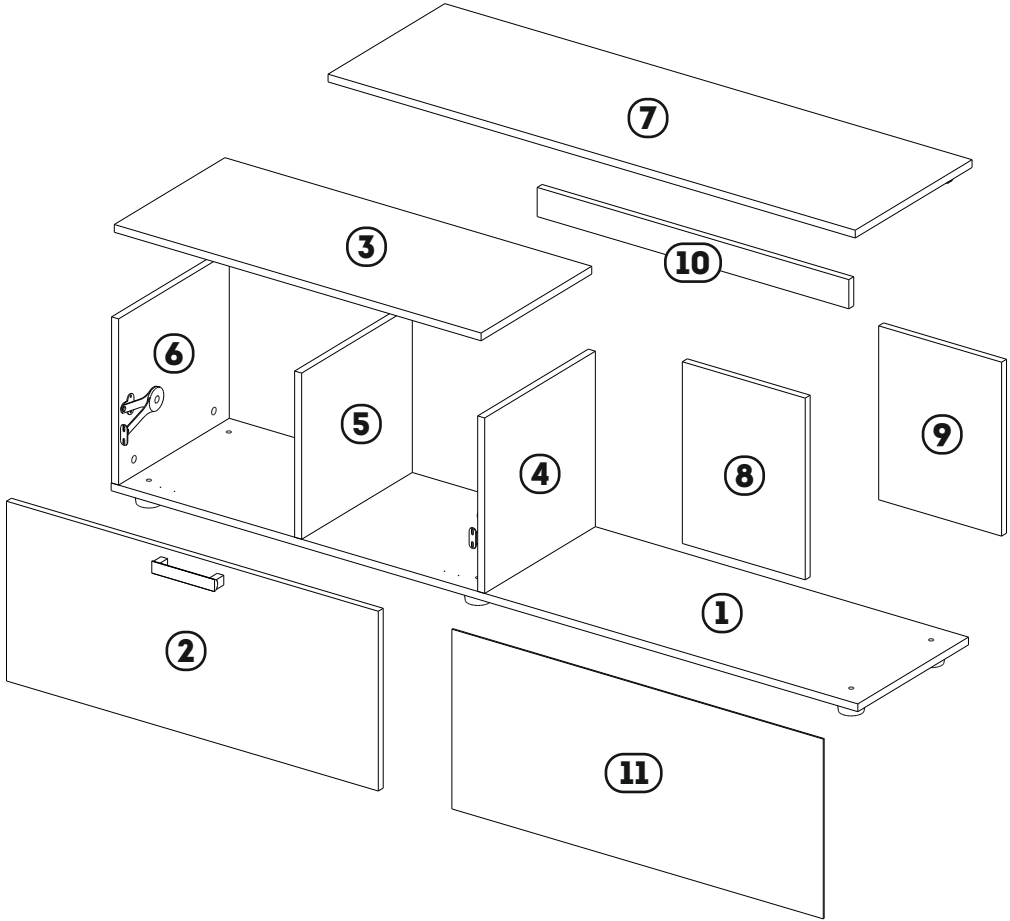
7
3
10
6
5
4
8
9
1
2
11

№	a*b	X	Pack
1	1701x360	1	1/1
2	370x847	1	1/1
3	835x360	1	1/1
4	358x360	1	1/1
5	342x360	1	1/1
6	342x360	1	1/1
7	1201x380	1	1/1
8	374x280	1	1/1
9	358x280	1	1/1
10	60x710	1	1/1
11	370x846	1	1/1

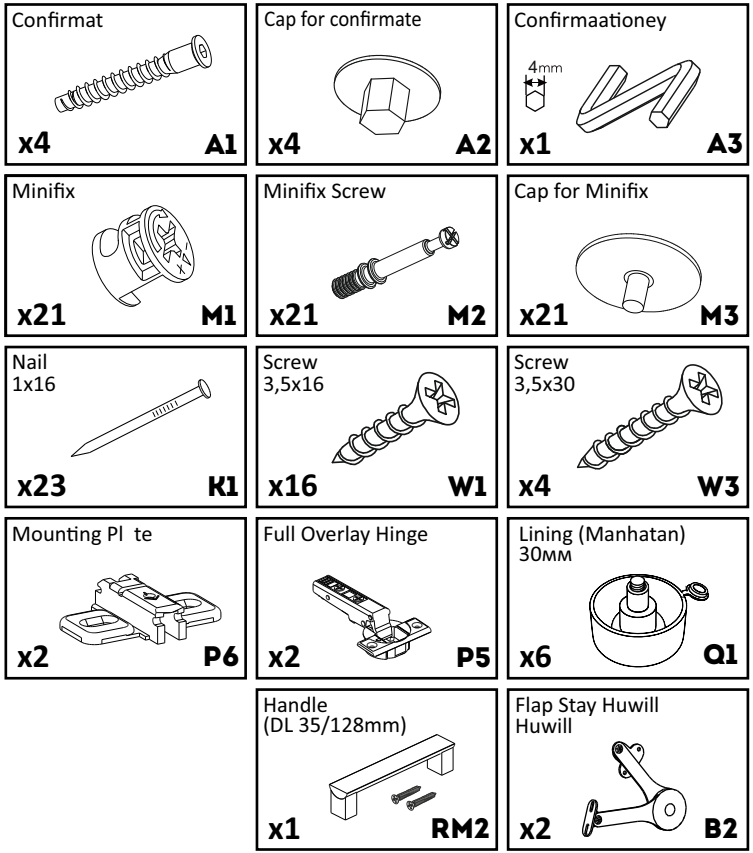

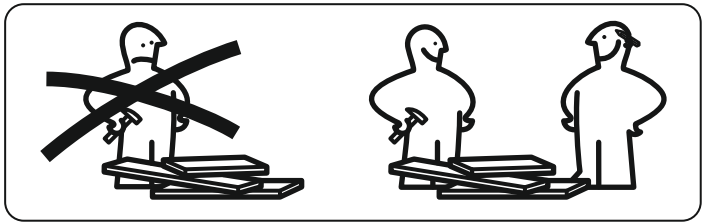

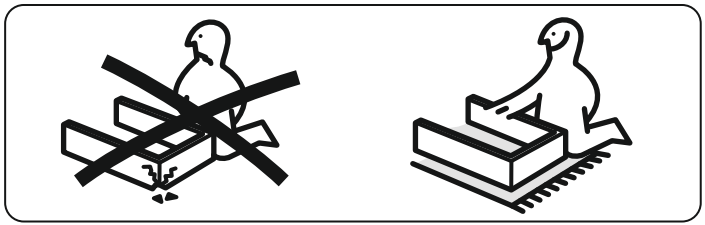

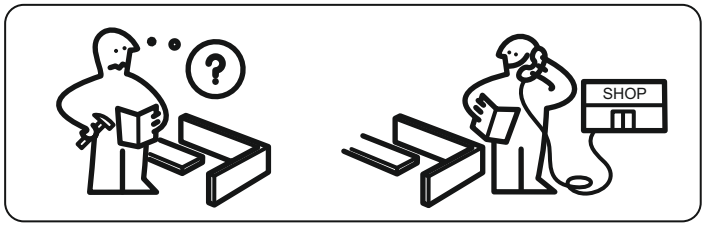

GENERAL TECHNICAL INSTRUCTIONS FOR FURNITURE ASSEMBLY

- CHECK COMPATIBILITY OF PARTS AND ACCESSORIES BEFORE ASSEMBLY.
- FOR FURNITURE ASSEMBLY, WE RECOMMEND USING THE SERVICES OF QUALIFIED SPECIALISTS.
- DO ASSEMBLY ON A SURFACE COVERED WITH CLOTH OR CARDBOARD TO PREVENT SCRATCHES.

CARE AND MAINTENANCE OF FURNITURE

- KEEP THE FURNITURE FROM PROLONGED CONTACT WITH WATER OR HOT STEAM.
- ENSURE SUFFICIENT DISTANCE FROM ELECTRICAL APPLIANCES AND HEATERS.
- IF THERE IS DIRTY ON THE FURNITURE, REMOVE IT WITH A DAMP CLOTH AND THEN WIPE IT DRY. DO NOT USE ABRASIVE MATERIALS.

1

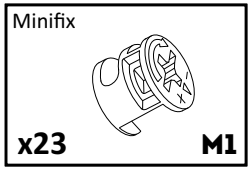
Minifix
x23
M1

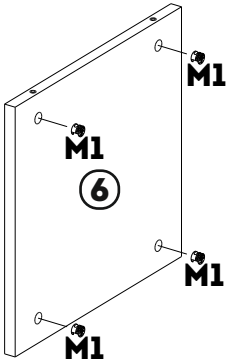
M1
M1
6
M1
M1

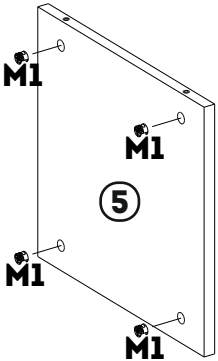
M1
M1
5
M1
M1

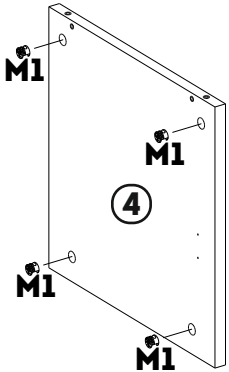
M1
M1
4
M1
M1

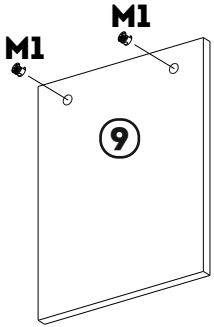
M1
M1
9

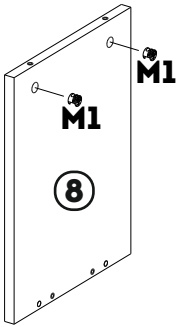
M1
M1
8

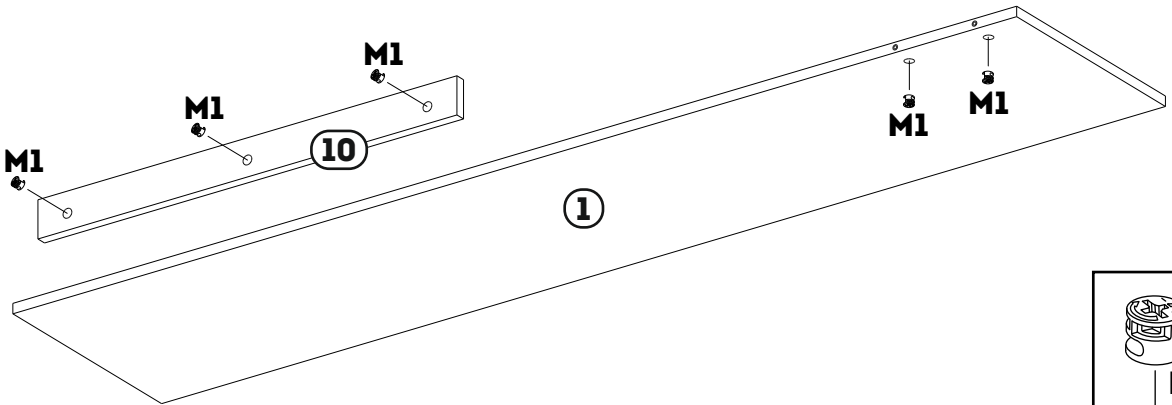
M1
M1
M1
10
M1
M1
1

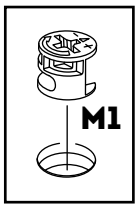
M1

2

Minifix Screw

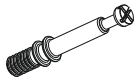

x10 M2

Mounting Pl te

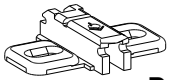

x2 P6

Screw
3,5x16

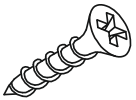

x4 W1

Lining (Manhatan)
30мм

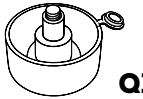

x6 Q1

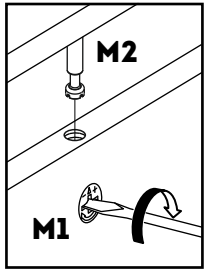

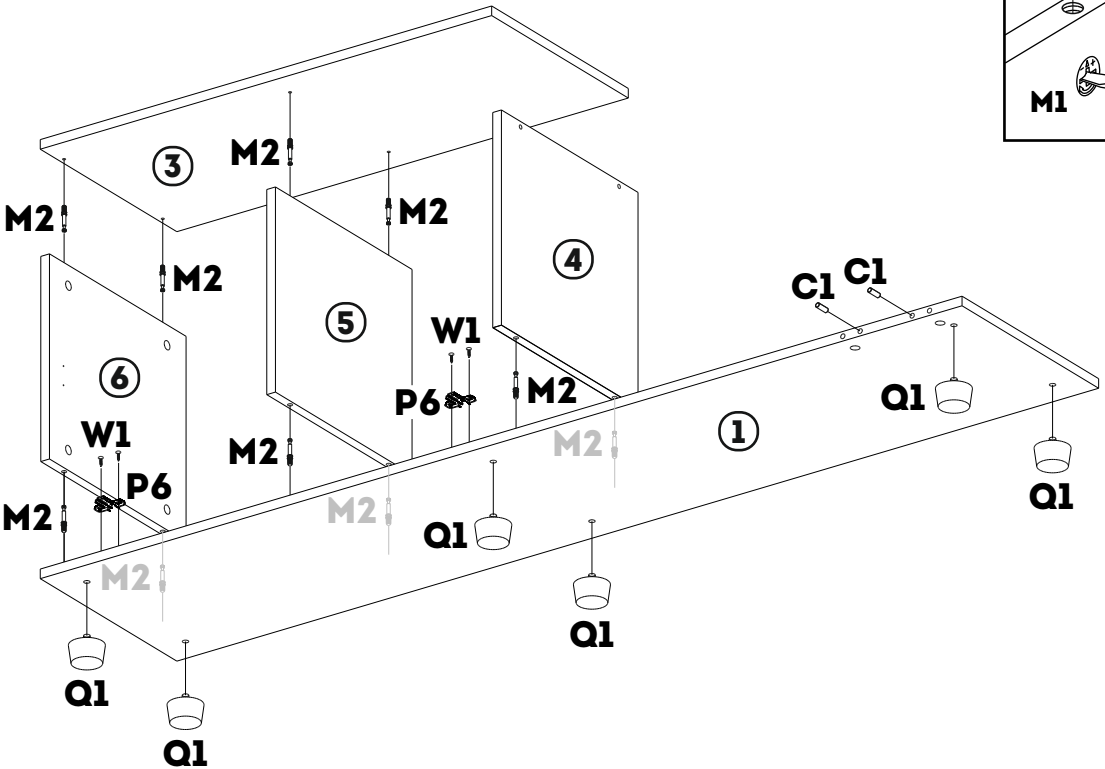

3

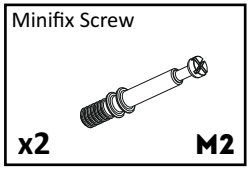
Minifix Screw
x2
M2

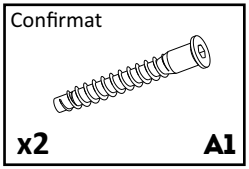
Confirmat
x2
A1

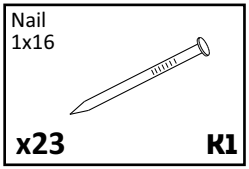
Nail
1x16
x23
K1

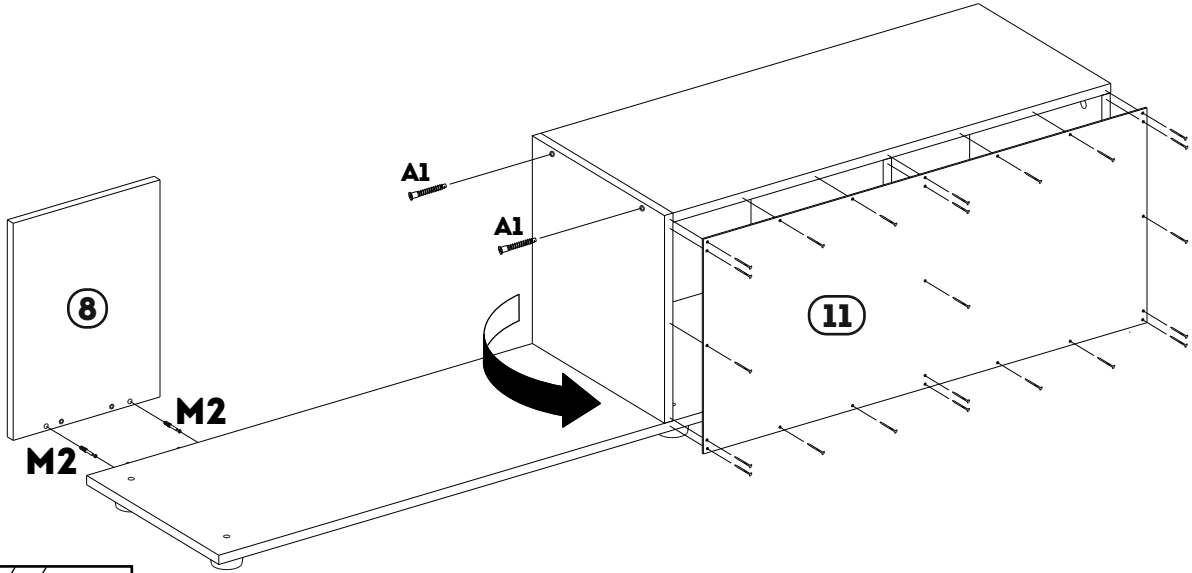
A1
A1
8
11
M2
M2

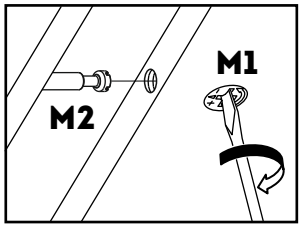
M1
M2

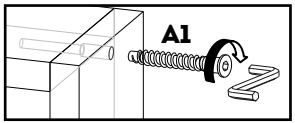
A1

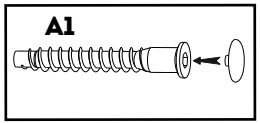
A1

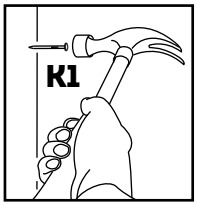
K1

4

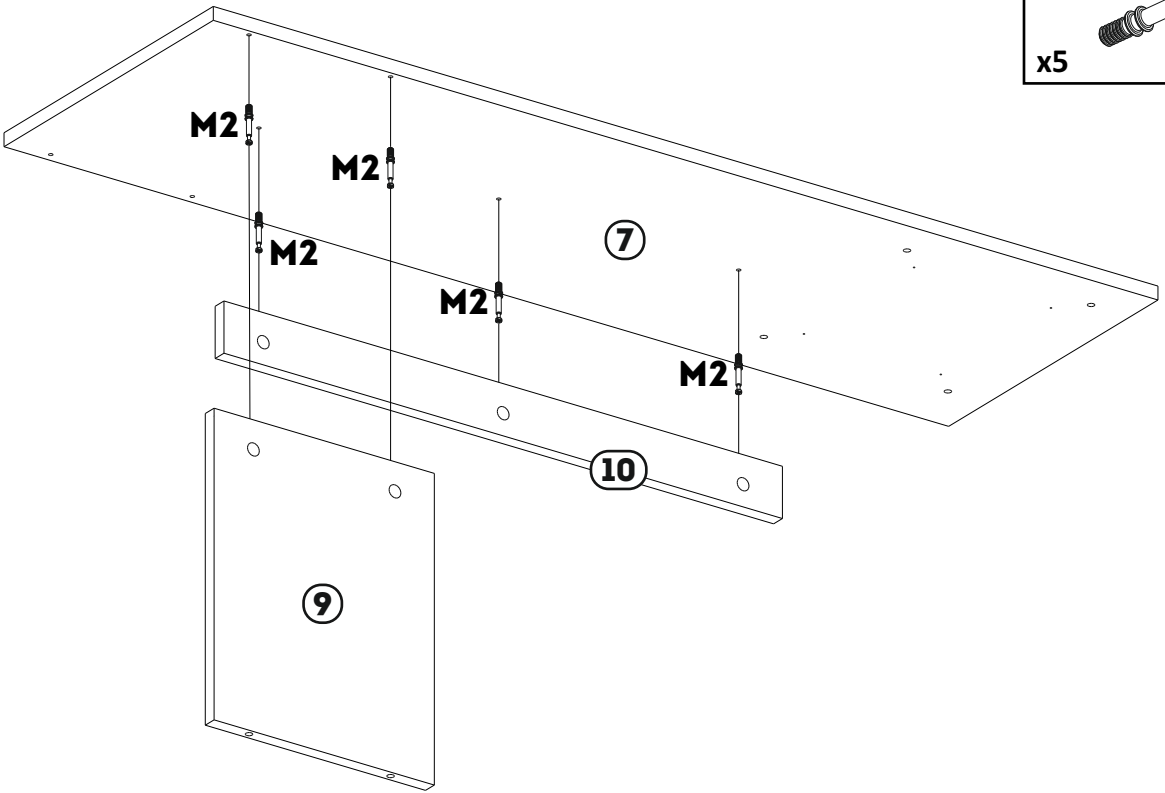

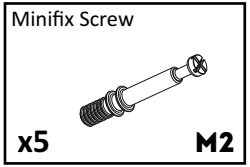

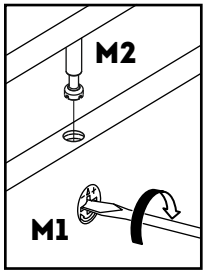

5

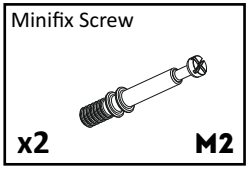
Minifix Screw
x2
M2

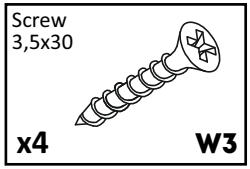
Screw
3,5x30
x4
W3

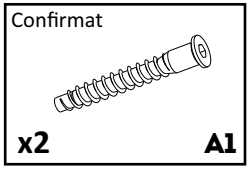
Confirmat
x2
A1

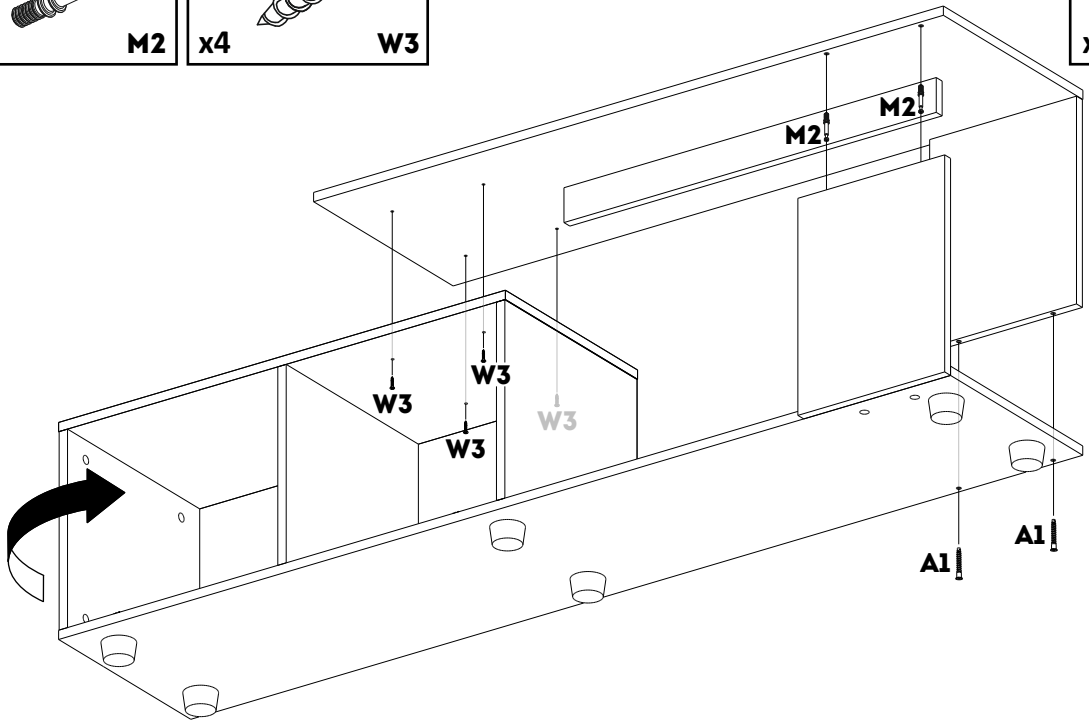
M2
M2
W3
W3
W3
W3
A1
A1

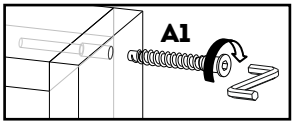
A1

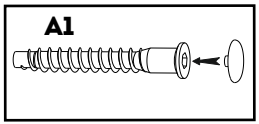
A1

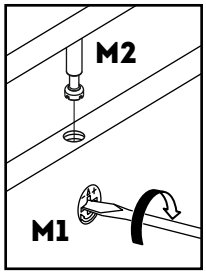
M2
M1

6

Handle
(DL 35M/128mm)

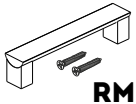

x1 RM2

Full Overlay Hinge

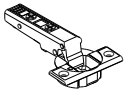

x2 P5

Screw
3,5x16

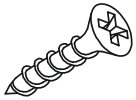

x4 W1

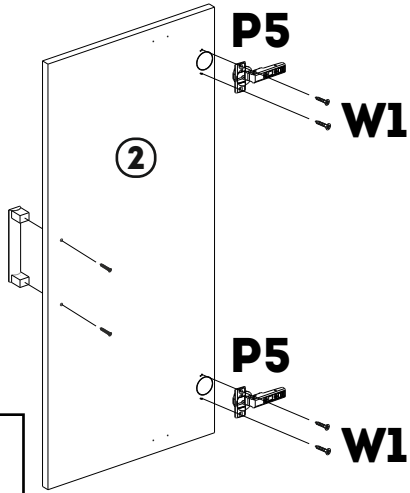

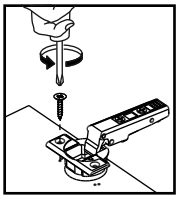

7

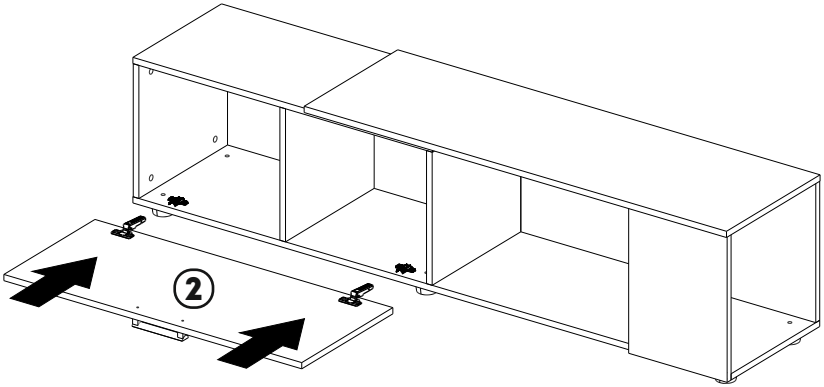

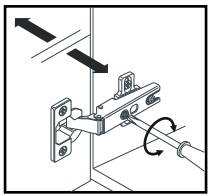

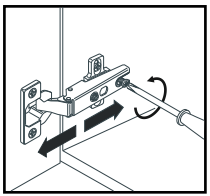

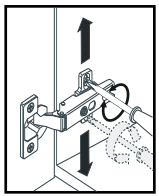

8

Flap Stay Huwill
Huwill

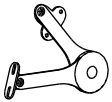

x2 B2

Screw
3,5x16

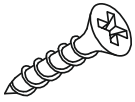
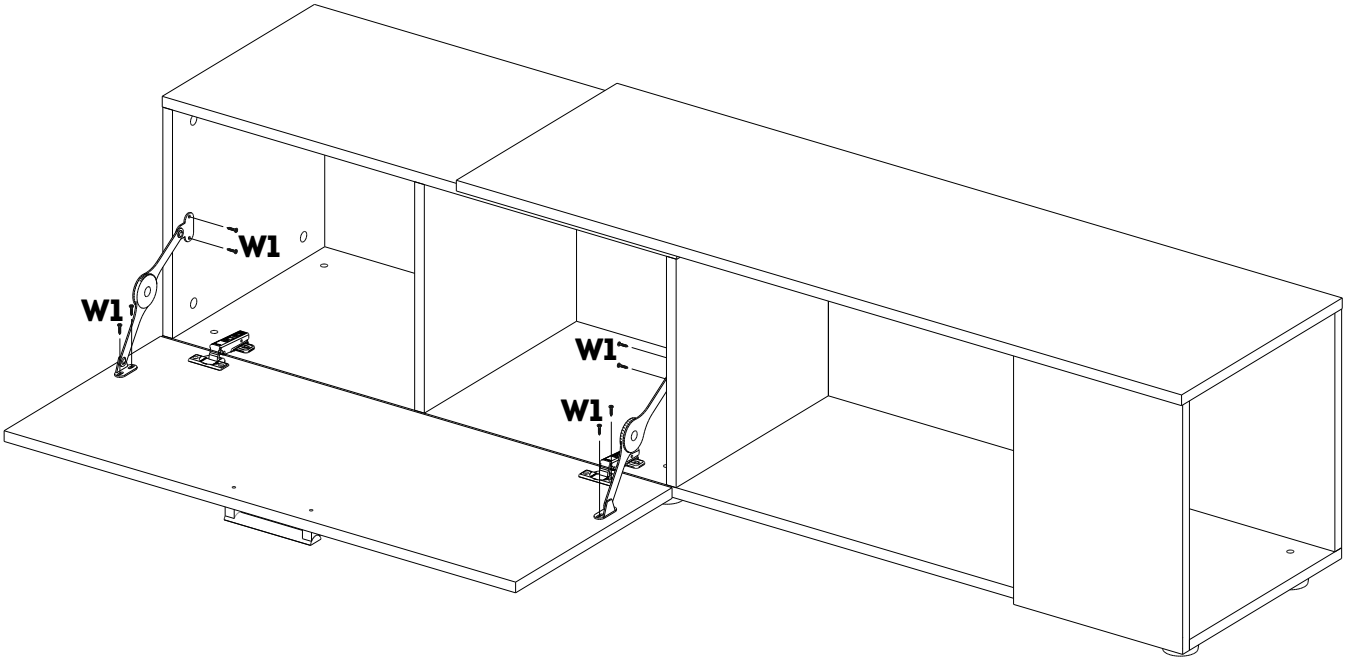
x8 W1