279-000024

ASSEMBLY INSTRUCTIONS

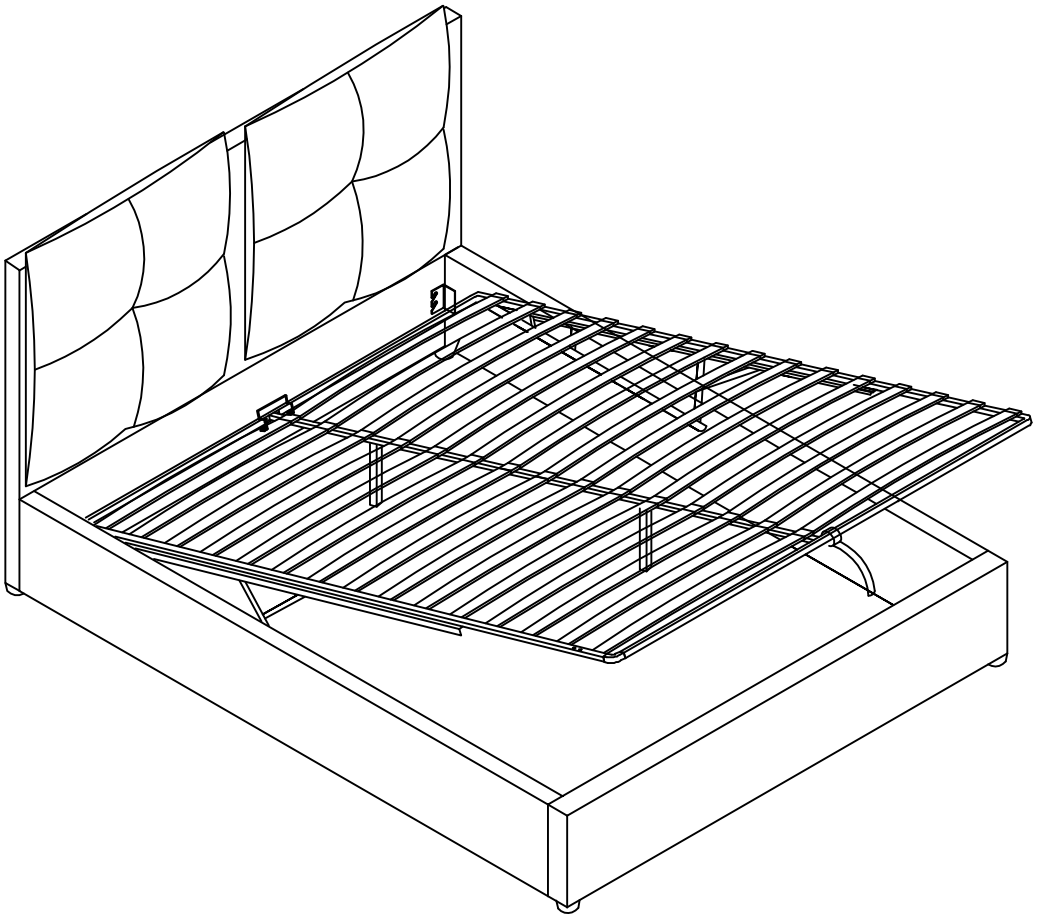

Parts List

1. HEAD BOARD 1PC 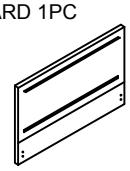	2. FOOT BOARD 1PC 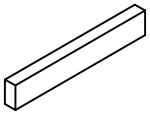	3. SIDE RALL1PCS 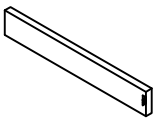	4. SIDE RALL 1PCS 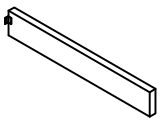
5. BEDSTEAD RAIL 2 SETS 	6. SLAT 30 PCS 	7. Single Plastic Cap 30pcs 	8. Double Plastic Cap 15pcs 
9. LEG 4 PCS 	10. 4 PCS 	11. Support Leg 2 PCS 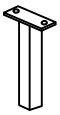	12 . 2 pcs 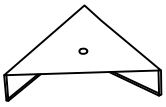
13. Non-woven fabrics 1pc 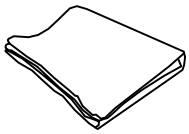	14. 1 PCS 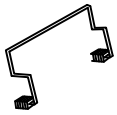	15. Center Support Bar 1pc 	16. Digging rope 1PC 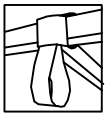
17. BEDSTEAD RAIL 2 SETS 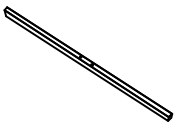	18. 2 PCS 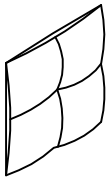		

Hardware List

A. M8*30 x16 PCS 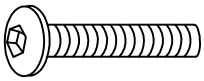	B. M8*40 x 14 PCS 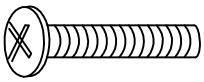	C. 14pcs 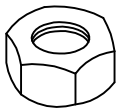	D. 8 pcs 
E. 8 pcs 	F. M5 x1 PC 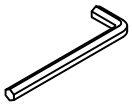	G. 1 pcs 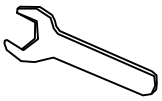	H. 1 pcs 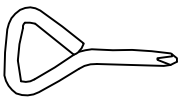
I. M4*40 x 4 PCS 			

The bed slats (6)and plastic caps (7&8)are in the back of the headboard .
Please take them out before you assemble the bed .

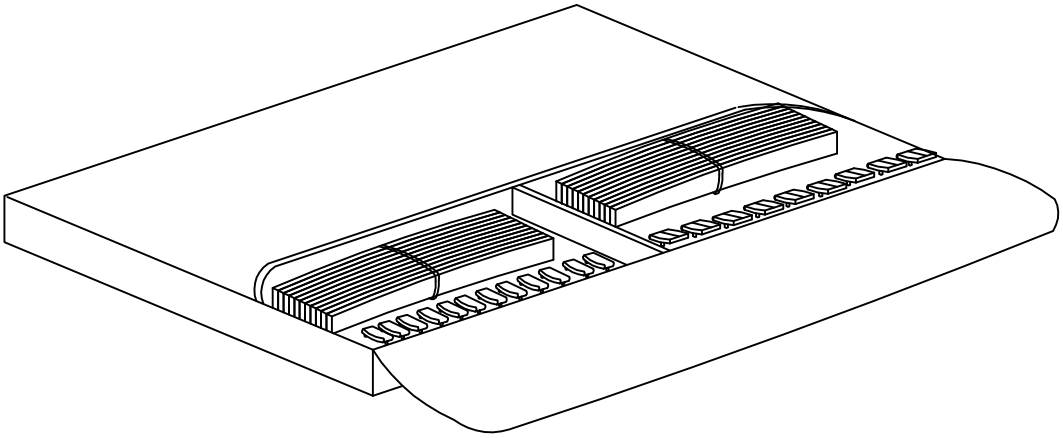

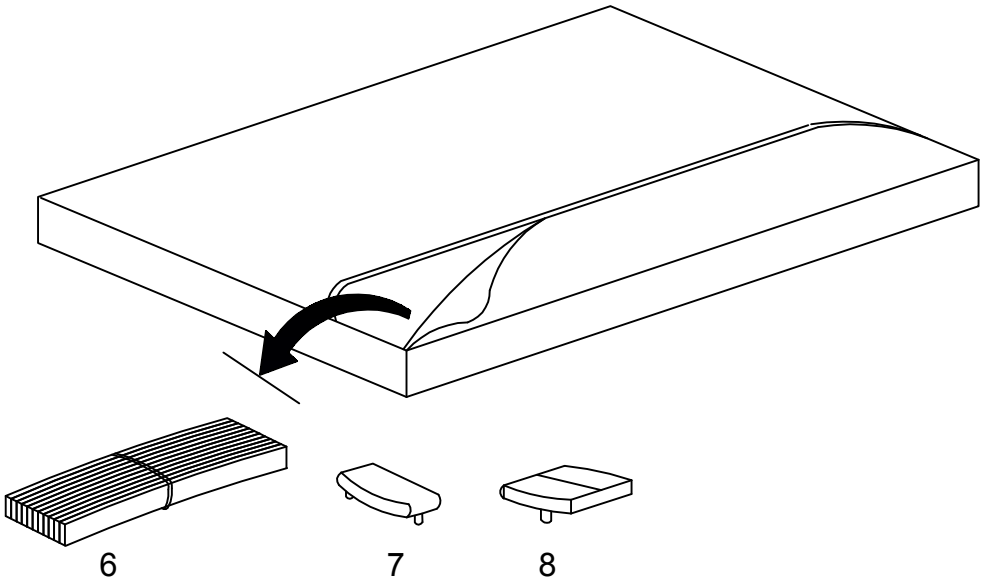

Step1

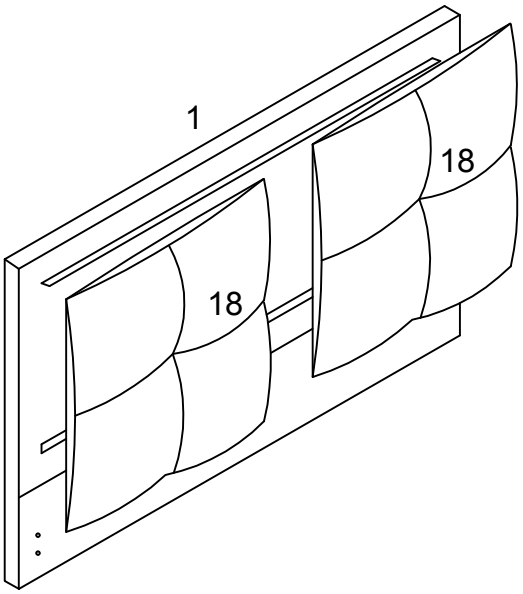

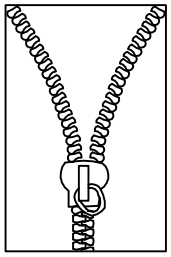

Step2

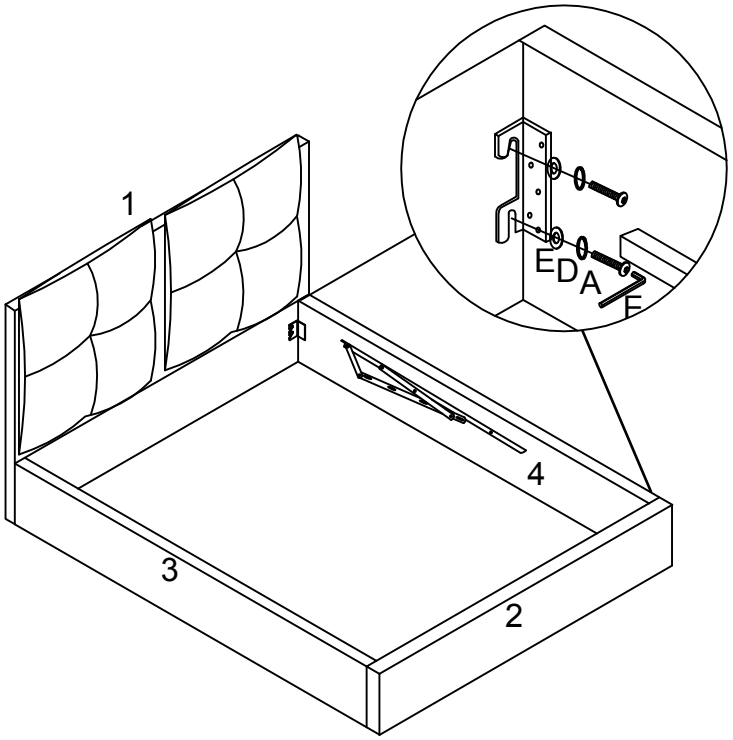

A		8
E		8
D		8
F		1

Step3

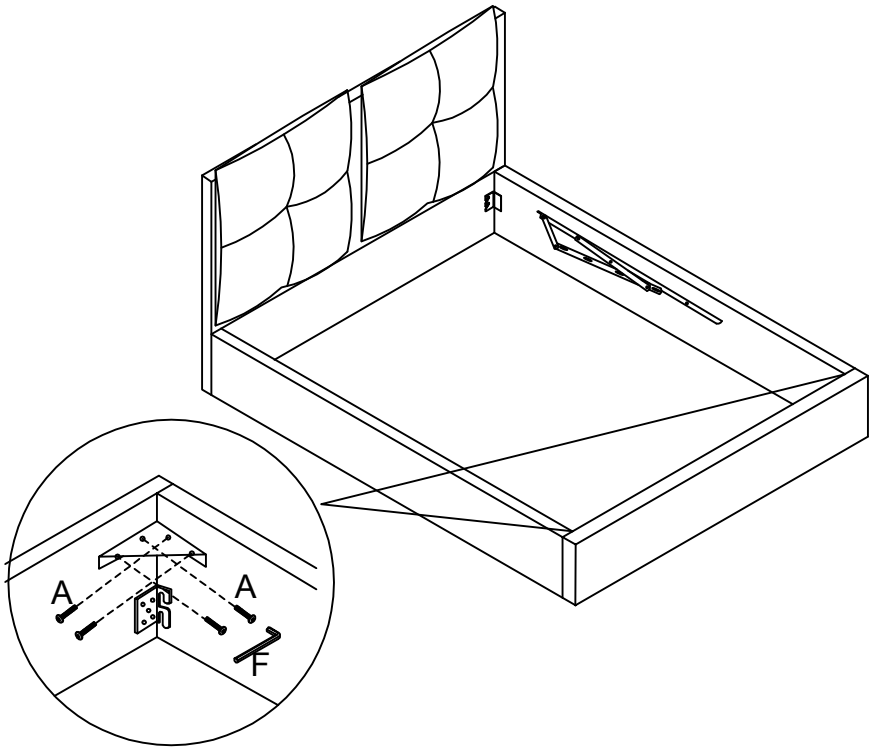

A		8
F		1
12		2

Step4

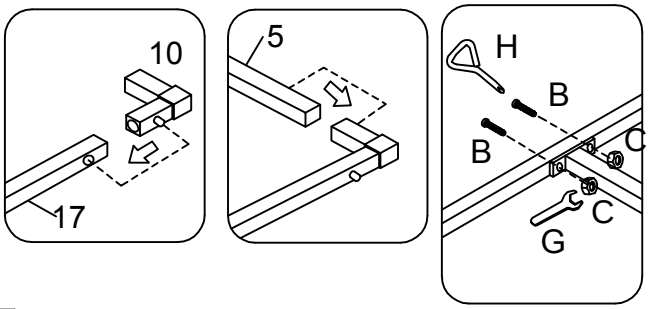

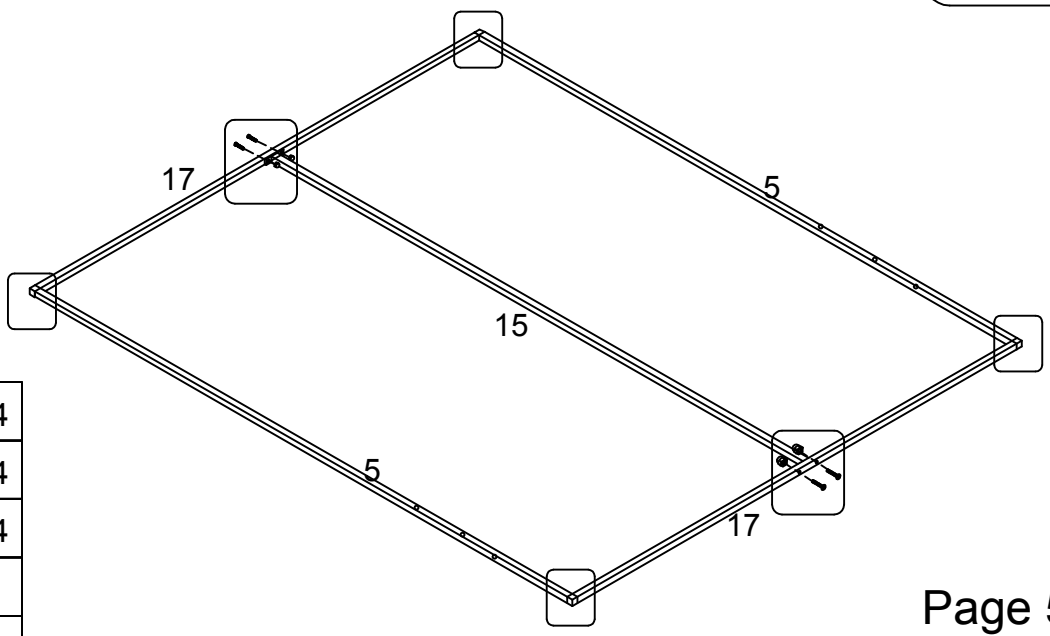

B		4
10		4
C		4
G		1
H		1

Step5

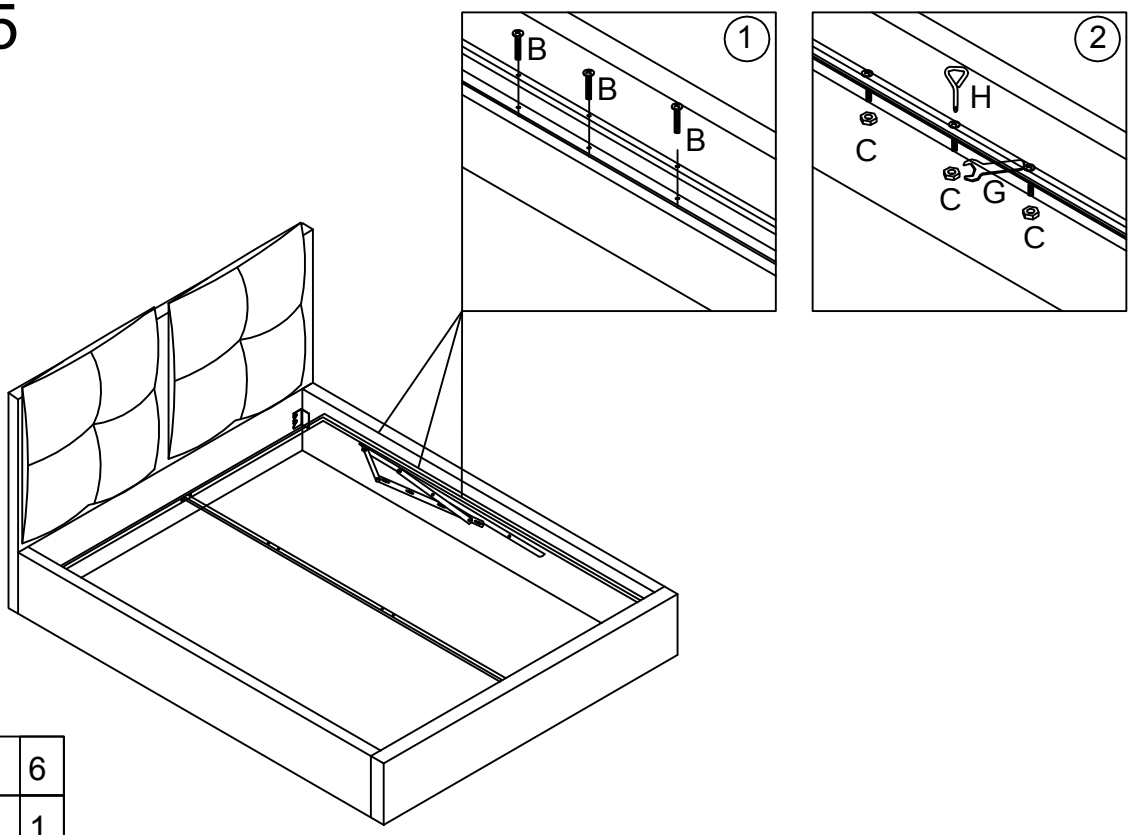

C		6
G		1
B		6
H		1

Step6

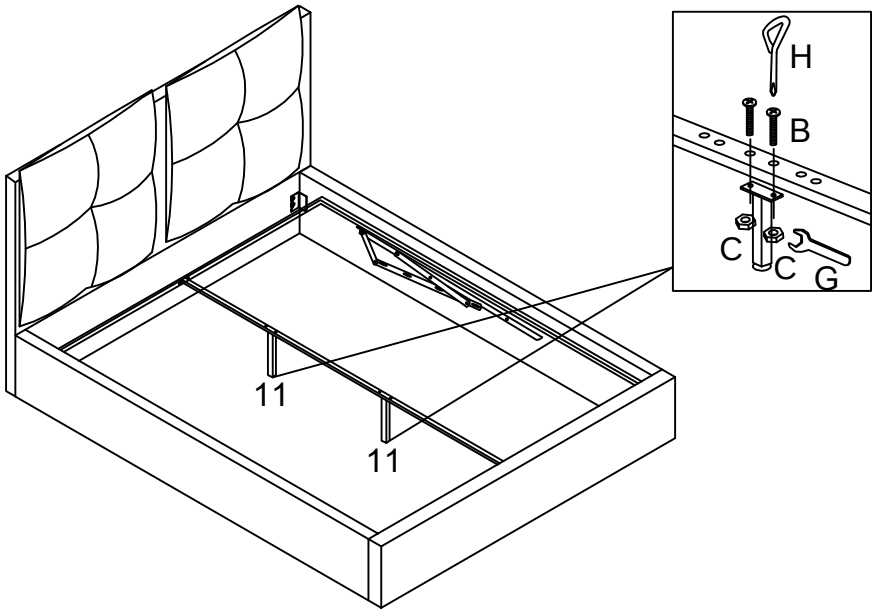

B		4
C		4
G		1
H		1

Step7

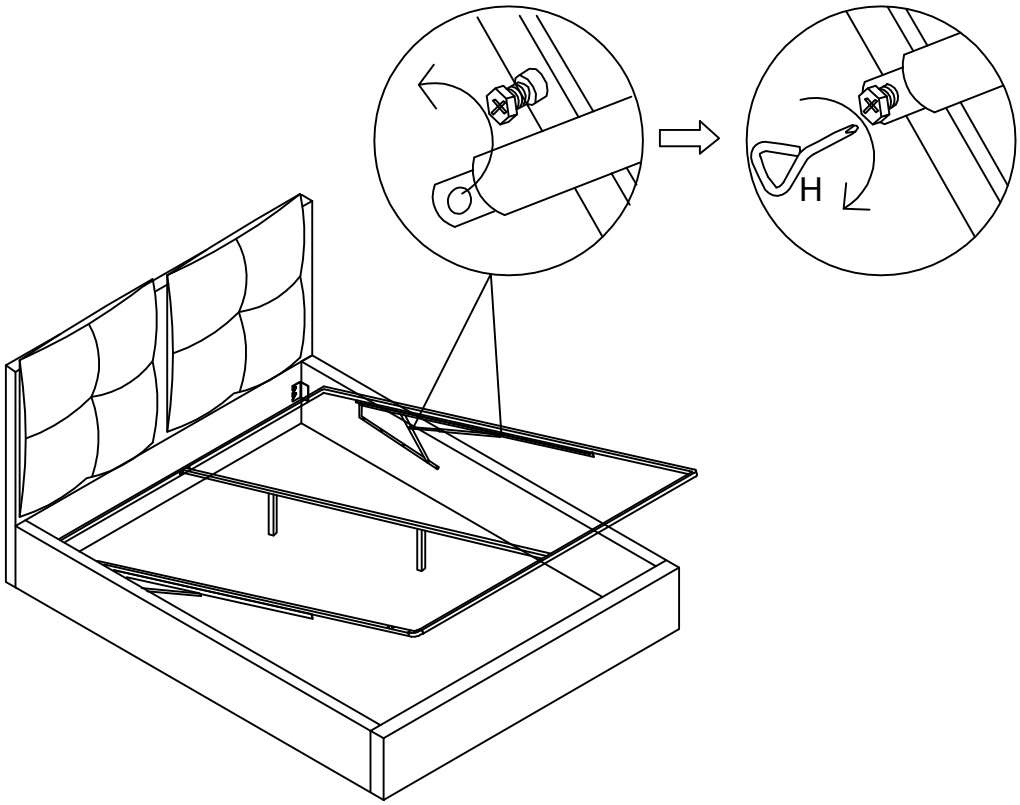

H		1

Step8

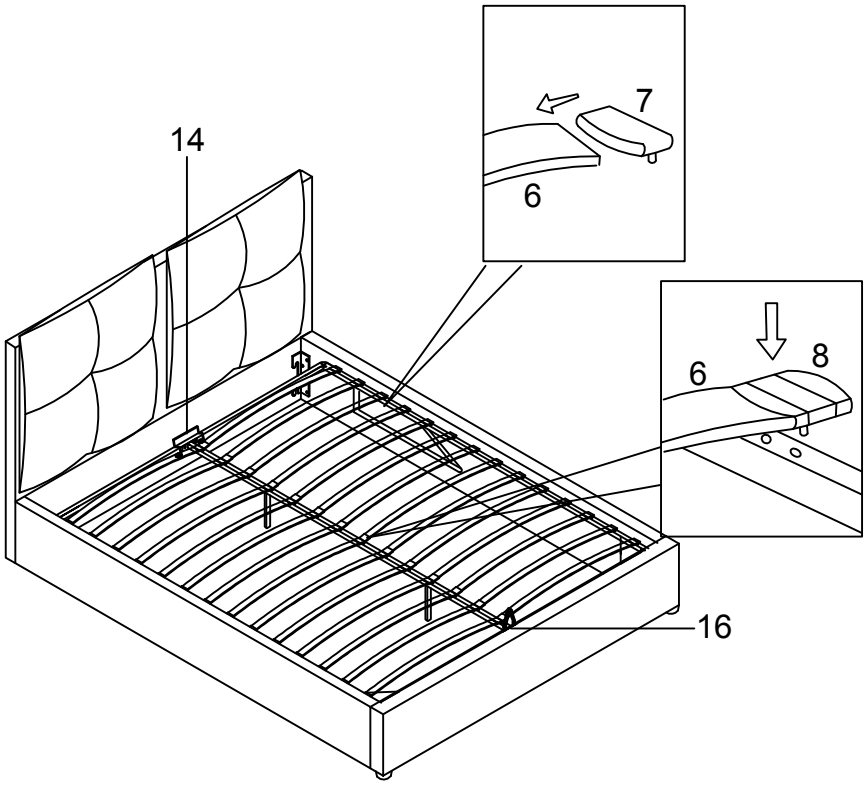

14		1
16		1
6		30
7		30
8		15

Step9

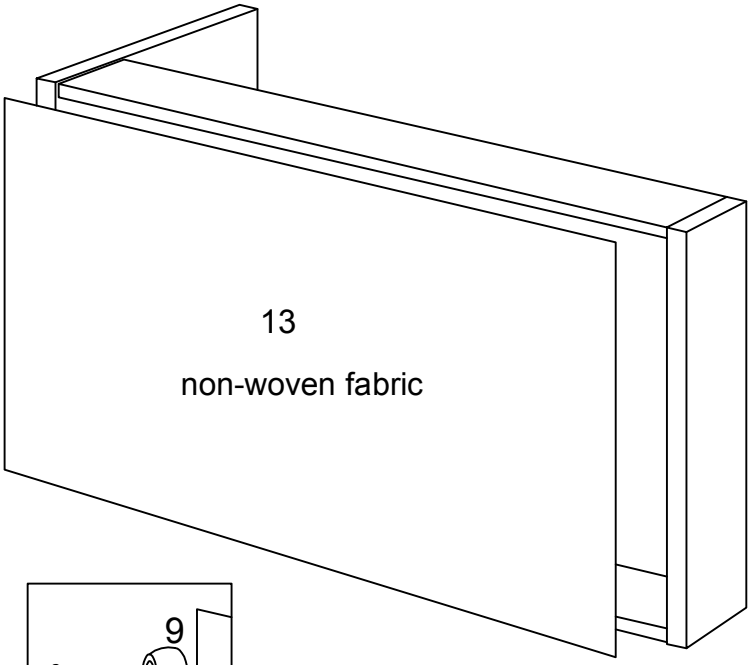

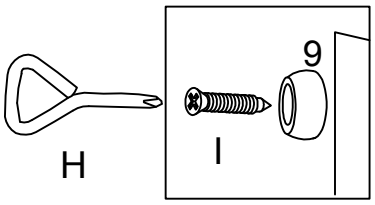

X4

I		4
M		1
9		4
H		1

Stick the non-woven fabric on bottom and then assemble the 4 foot

Step10

