| | |
|---|---|
| (1)X1 | (7)X5 |
| (2)X1 | (8)X1 Ø 8 |
| (3)X1(L)X1(R) 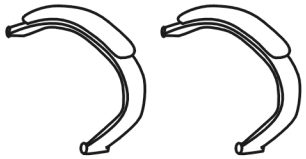 | (9)X4 |
| (4)X1 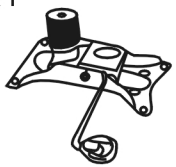 | (10)X4(8*55mm) |
| (5)X1 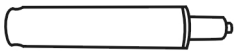 | (11)X4(6*25mm) |
| (6)X1 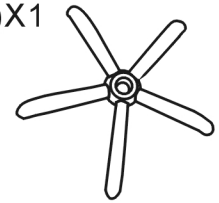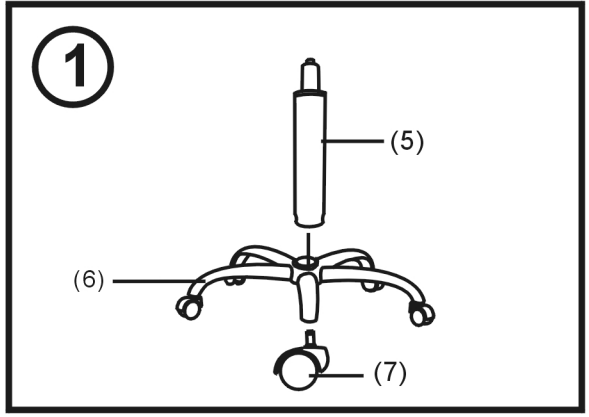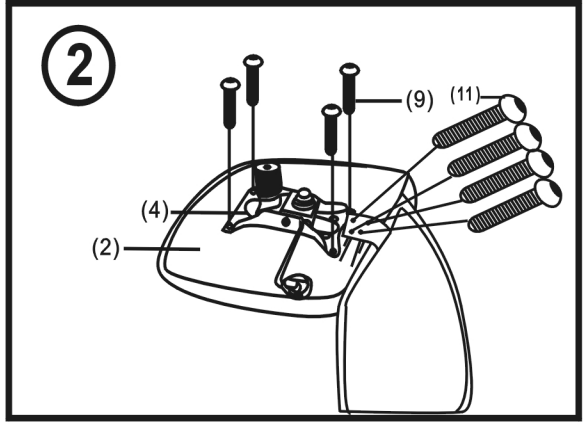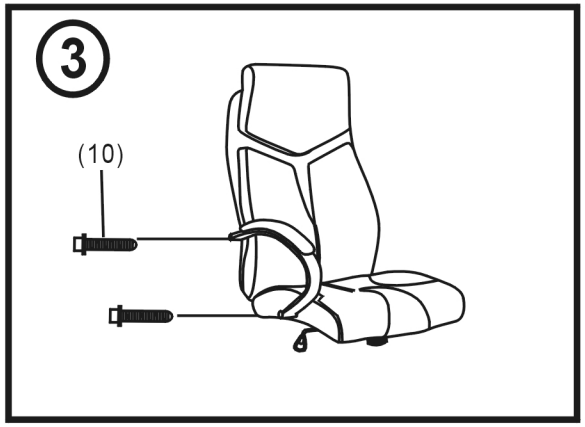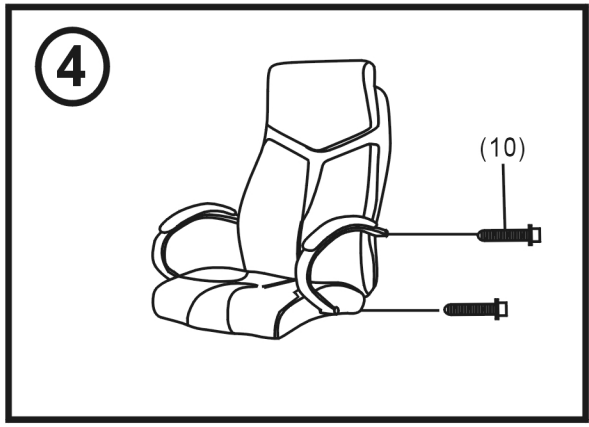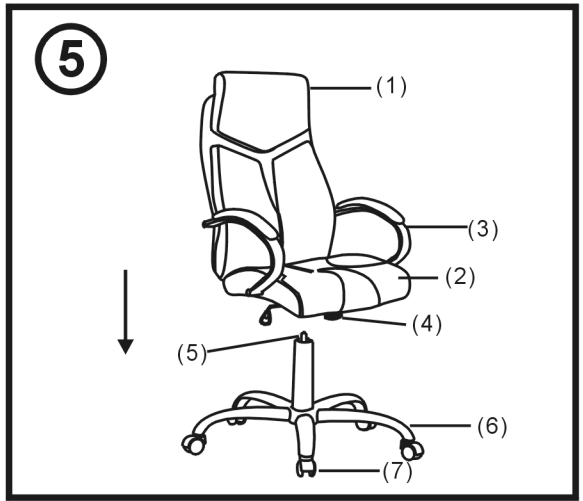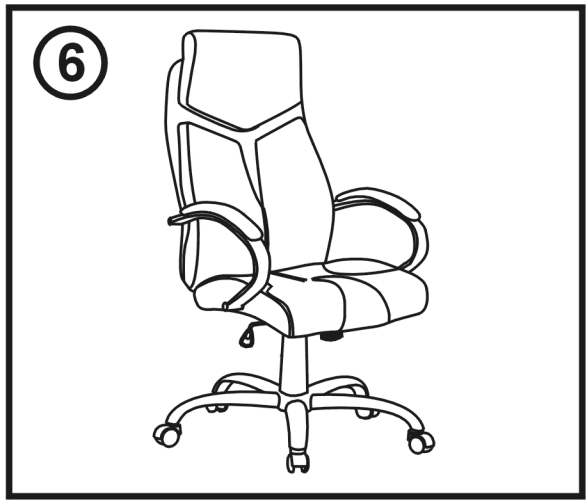 | |