101-000089

ASSEMBLY INSTRUCTION

1 –1PC 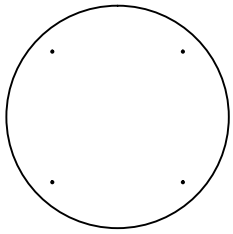	2 –4PCS	3 –1PC
A –8PCS M8x16	B –8PCS ϕ8xϕ16x1.2	C –1PC

1 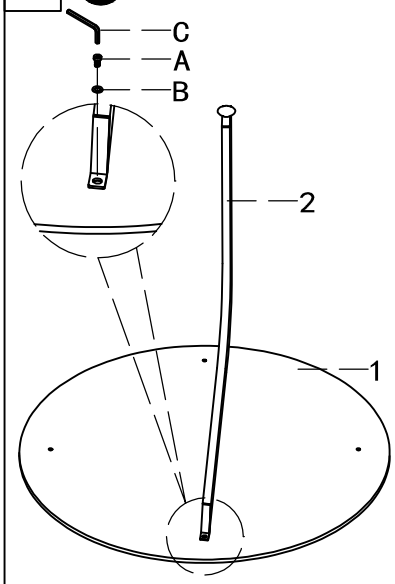

2 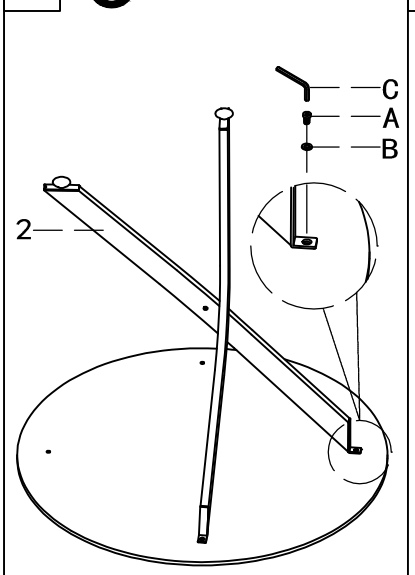

3 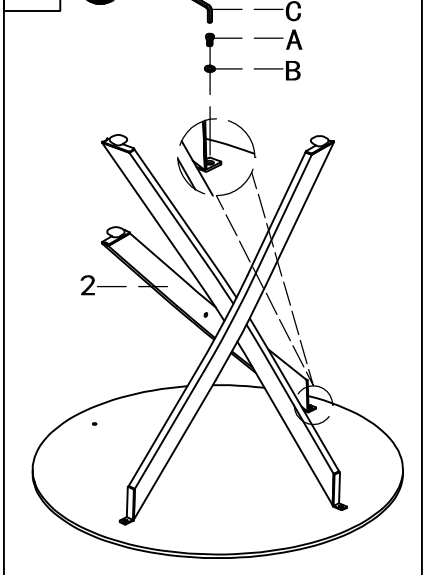
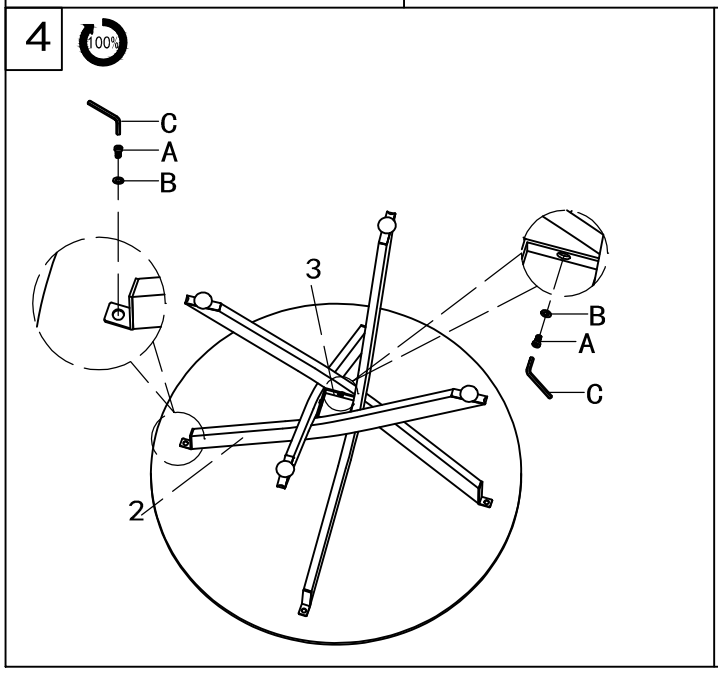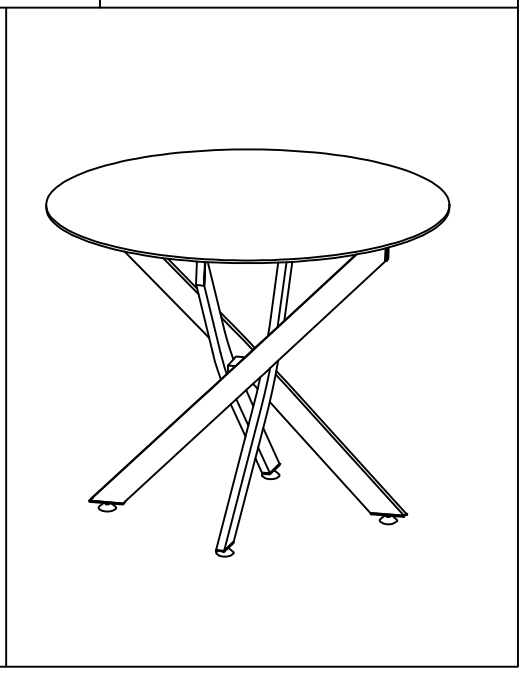
4