ASSEMBLY INSTRUCTION

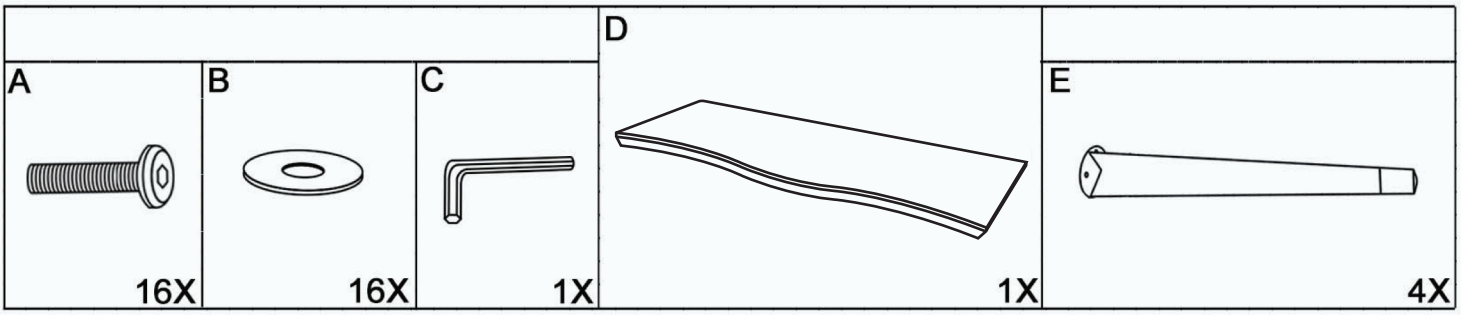

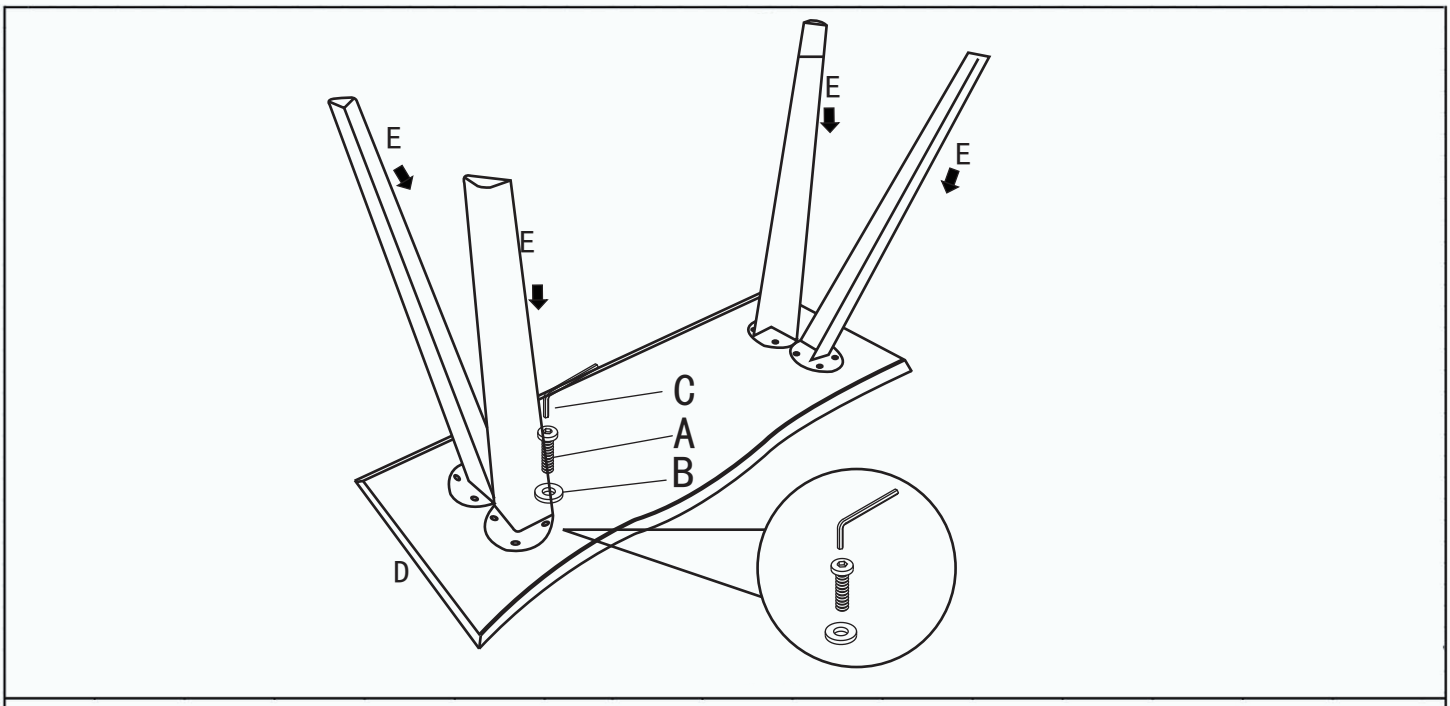

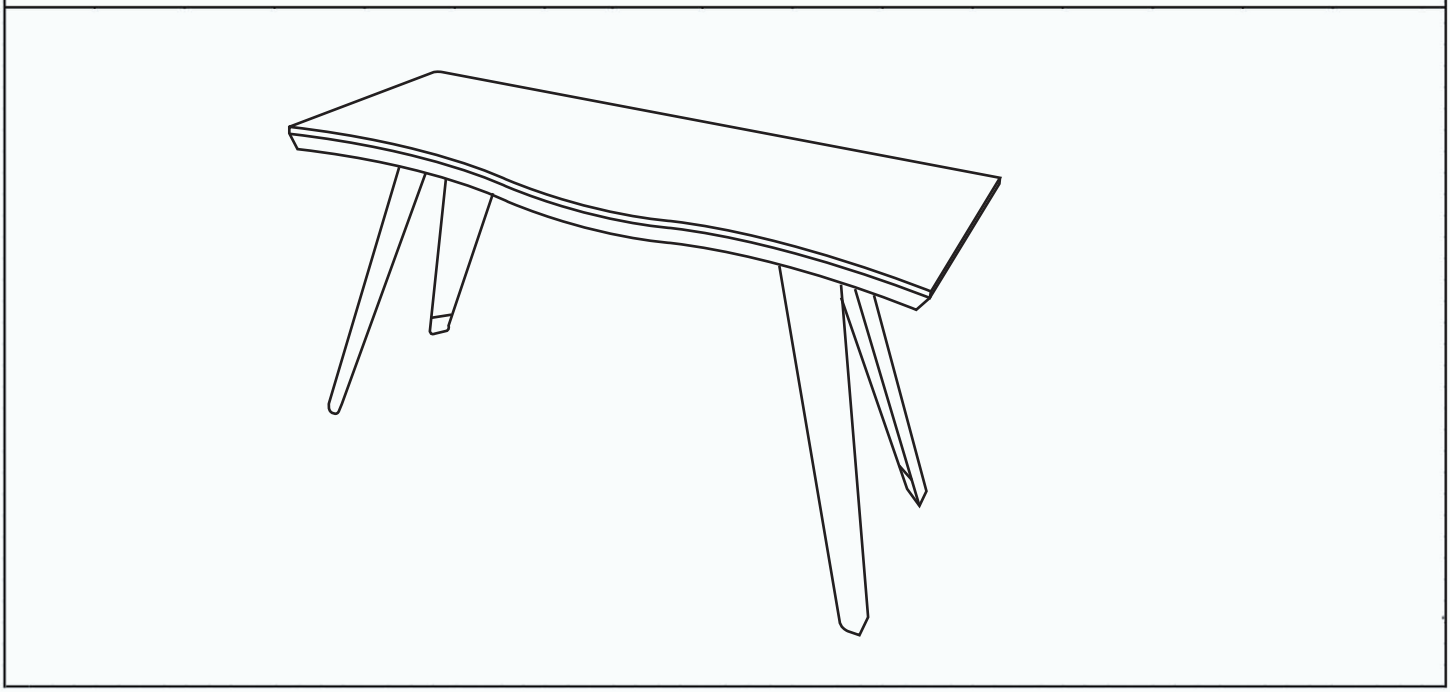

093-000013