ASSEMBLY INSTRUCTION

074-000124

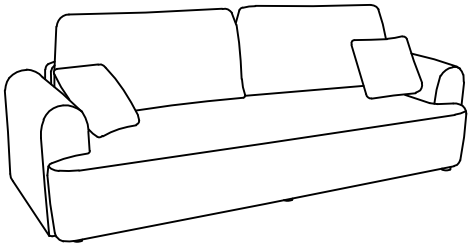

OR 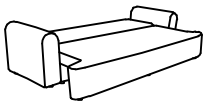

Please read this before you proceed		
NUMBER	COMPONENT	QUANTITY
A	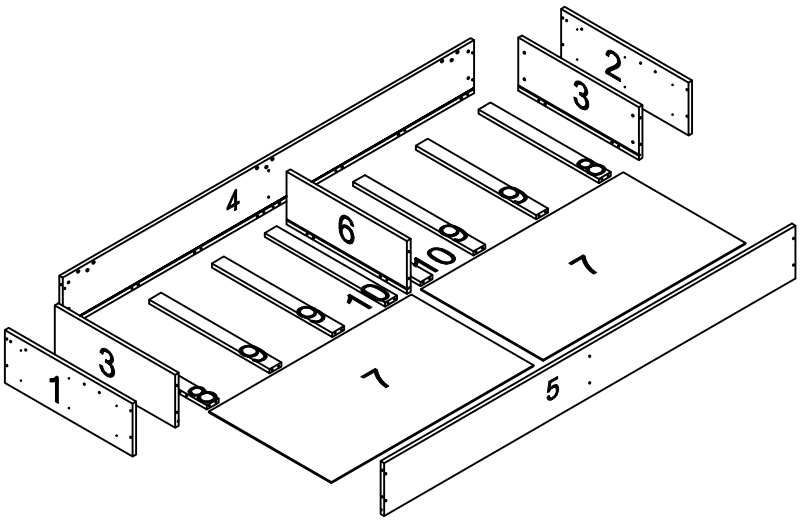 Three Seater Sofa Seat	1PC
B	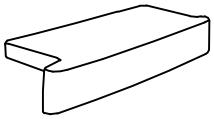 Three Seater Sofa Seat	1PC
C	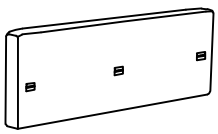 Sofa Backrest	1PC
D	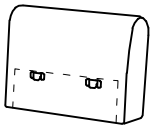 Armrest	2PCS

Please read this before you proceed		
NUMBER	COMPONENT	QUANTITY
E	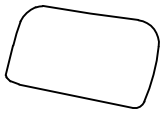 Backrest Pillow	2PCS
F	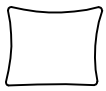 Throw Pillow	2PCS
G	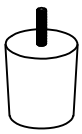 Accessory Feet	4PCS
H	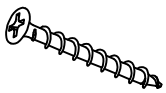 Self Tapping Screw 4*30mm	12PCS
I	 Ø8*30 Cork	24PCS
J	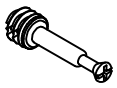 Three-In-One Rod	24PCS
K	 Eccentric Wheels	24PCS
L	 Castle Nut	20PCS
M	 Long Phillips Screw	20PCS
N	 Short Phillips Screw M6*16mm	17PCS
O	 Cabinet Frame Corner Connector	4PCS
P	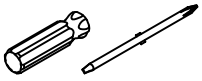 Screwdriver	1PC

Please read this before you proceed		
NUMBER	COMPONENT	QUANTITY
Q	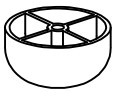 Accessory Feet	9PCS
R	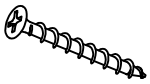 Self Tapping Screw 5*50mm	9PCS
S	 Sticker	20PCS

Step 1

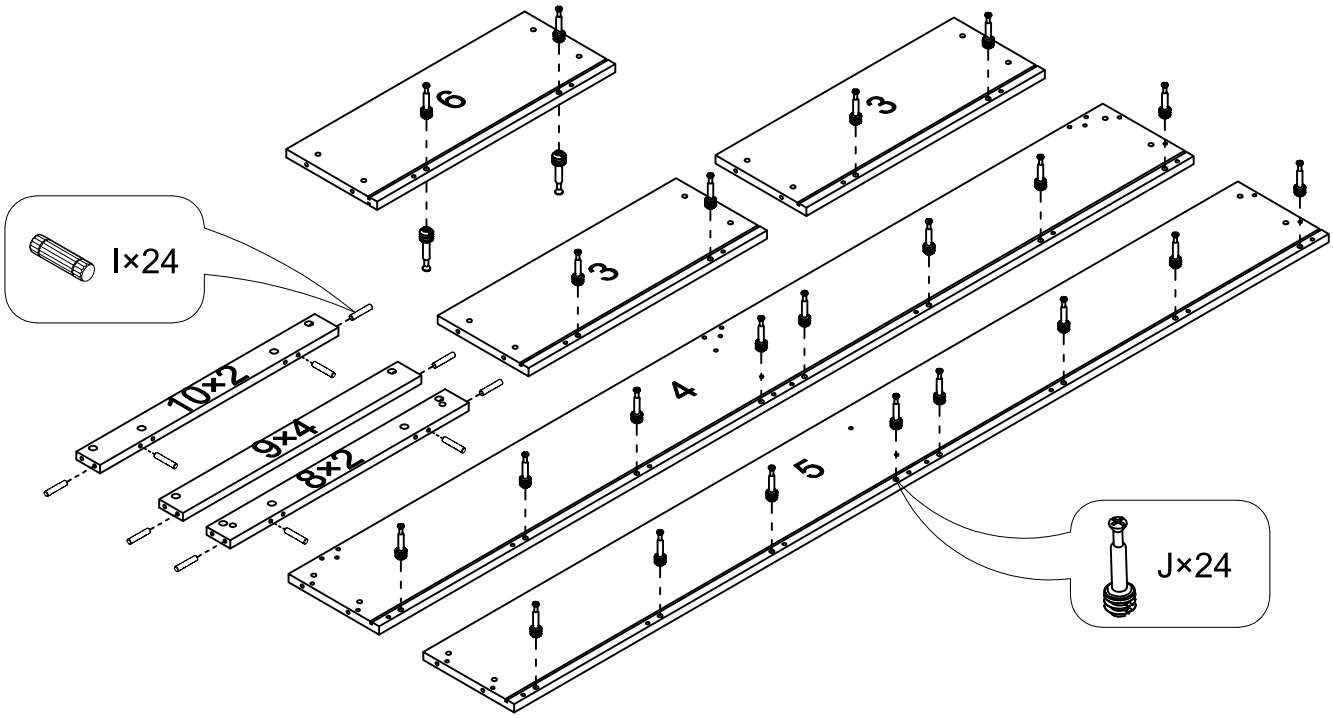

Step 2

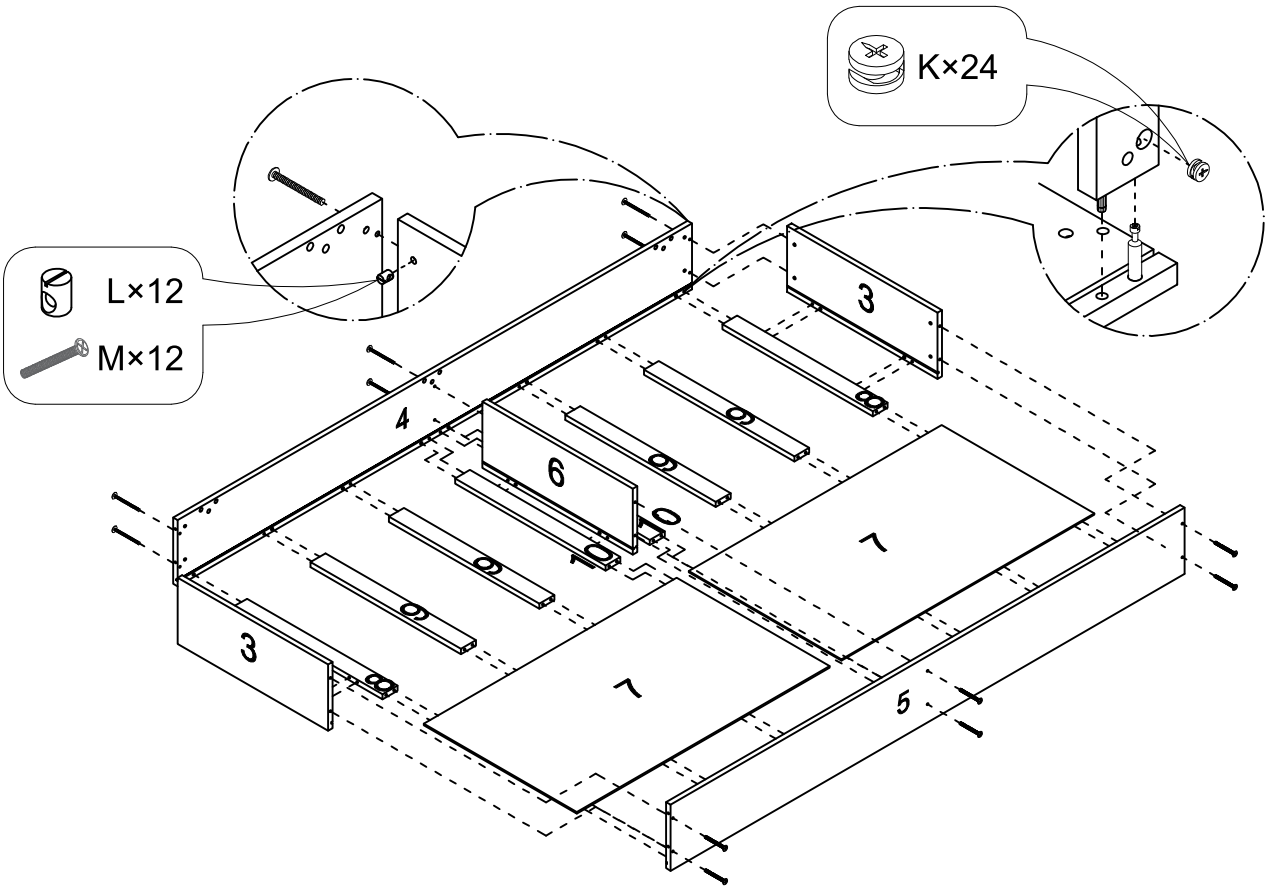

Step 3

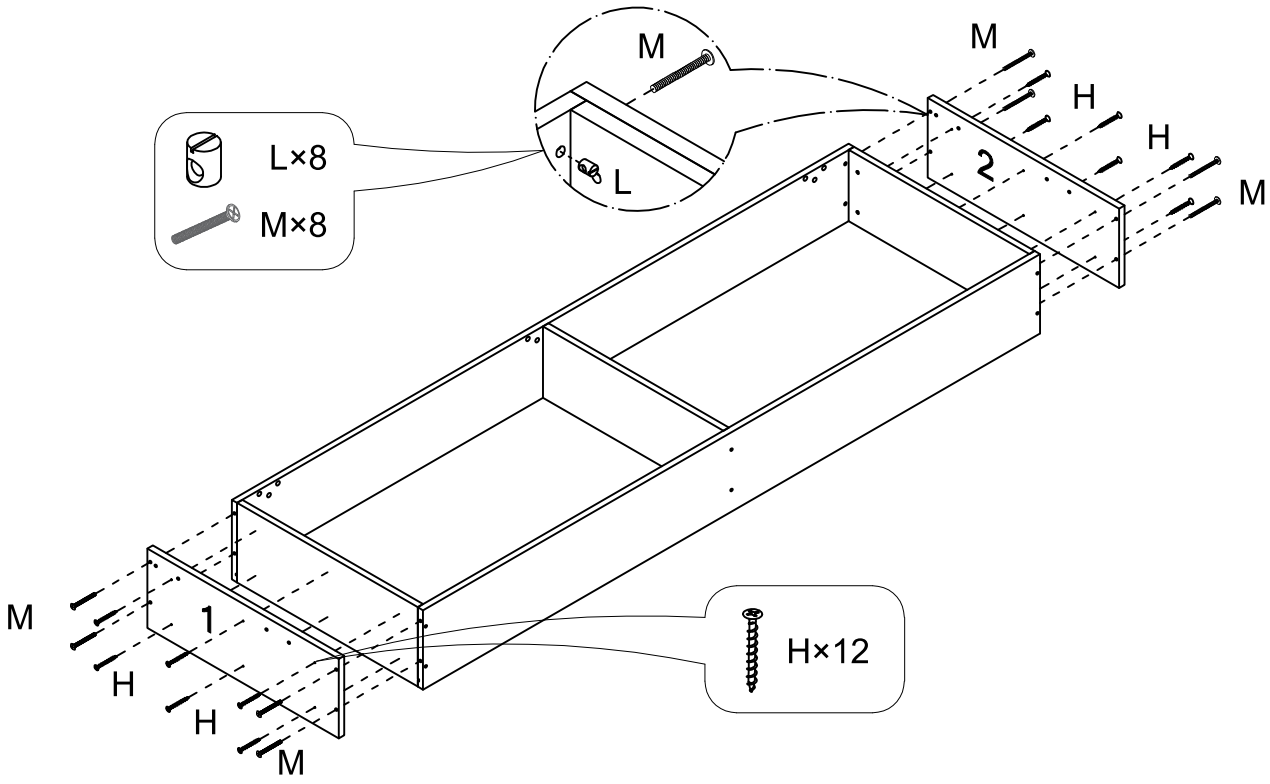

Step 4

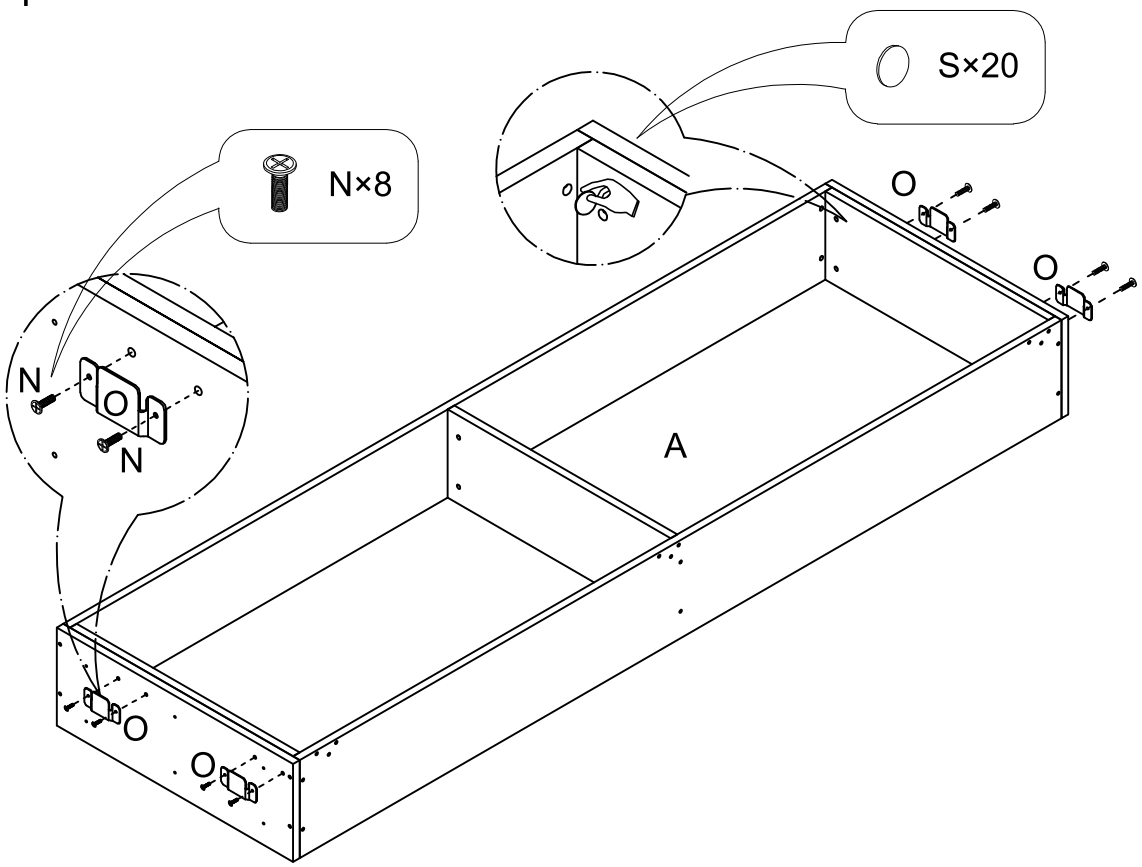

Step 5

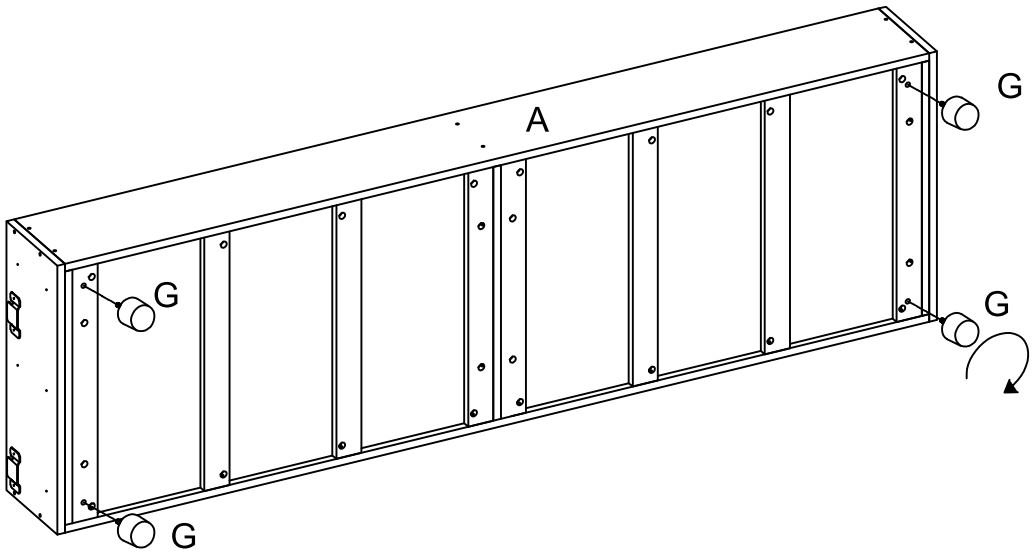

Step 6

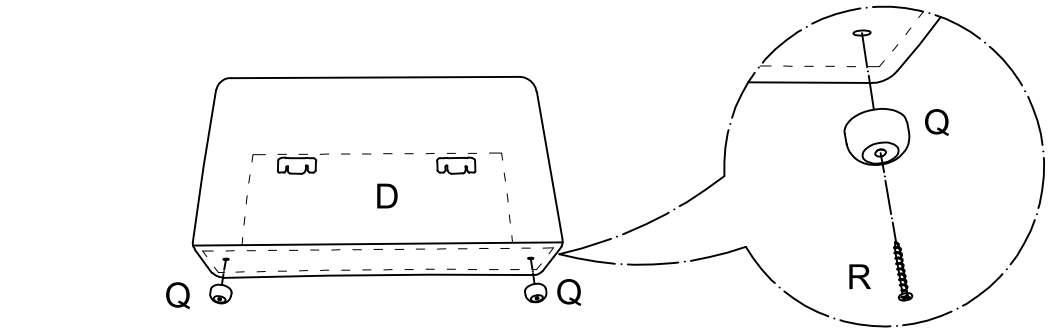

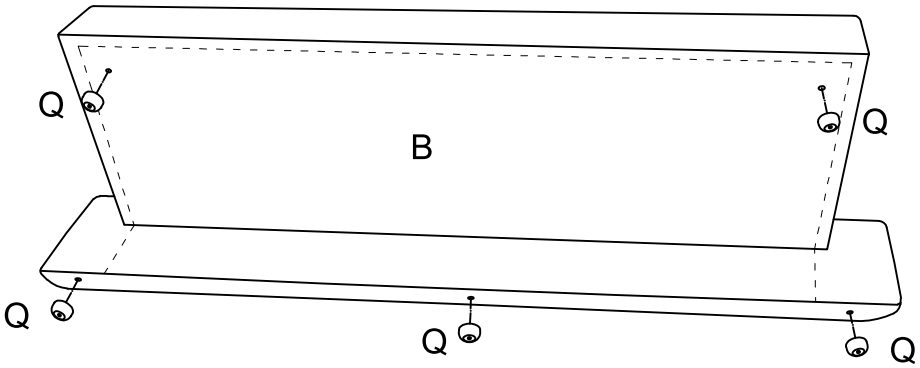

Step 7

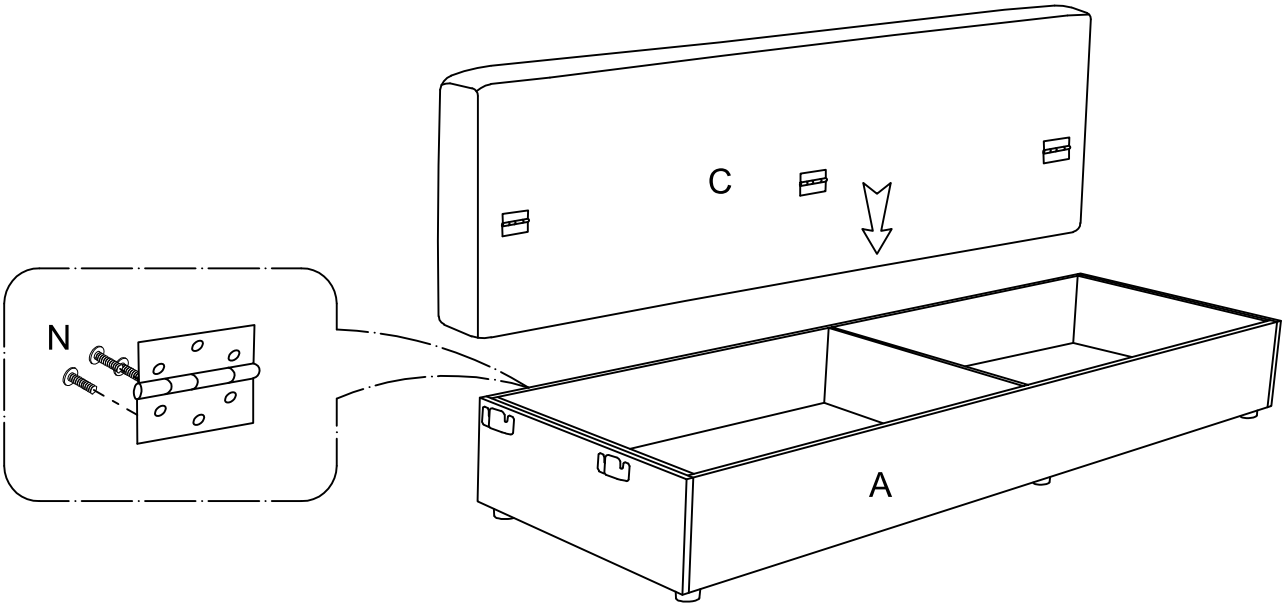

Step 8

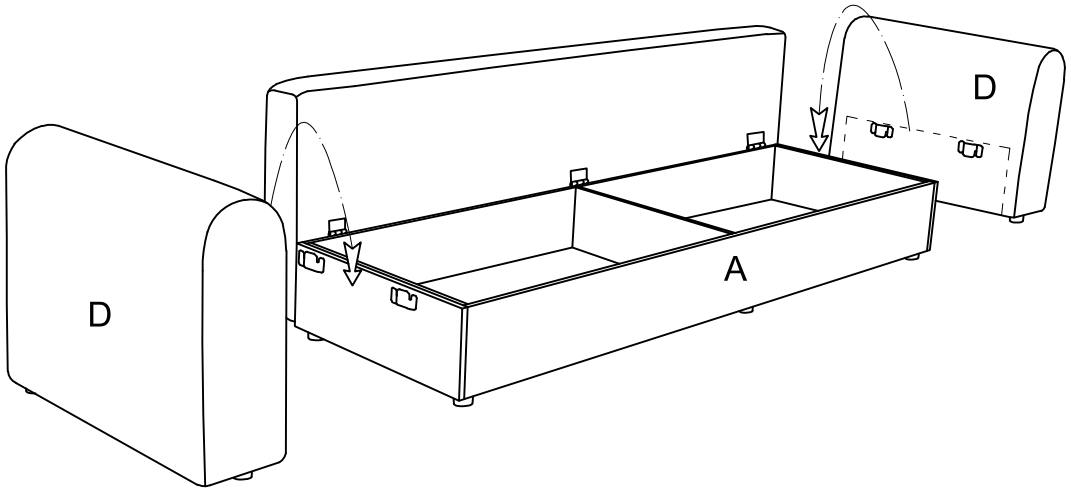

Step 9

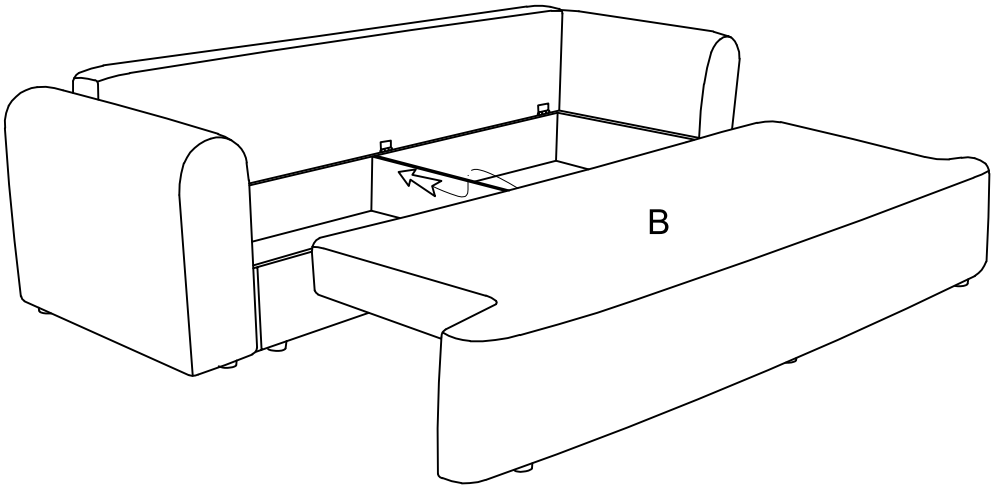

Step 10

