ASSEMBLY INSTRUCTION

074-000120

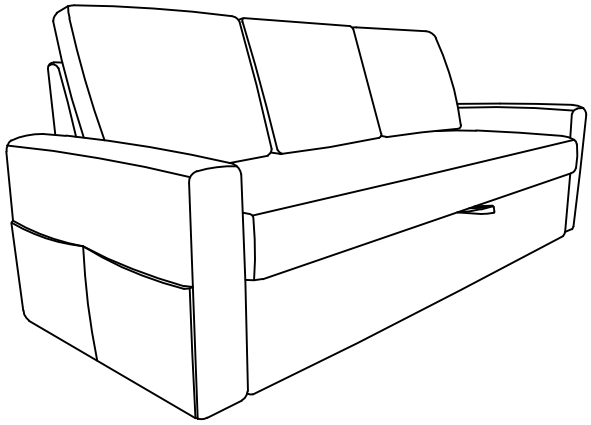

Please read this before you proceed		
NUMBER	COMPONENT	QUANTITY
A	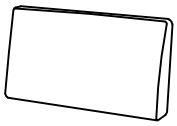 Sofa Backrest	3PCS
B	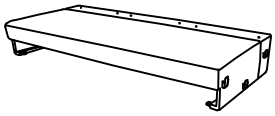 Three Seater Sofa Seat	1PC
C	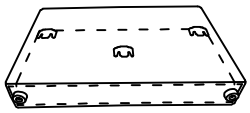 Armrest	2PCS
D	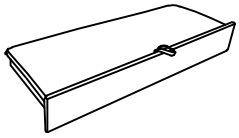 Movable Bed	1PC
E	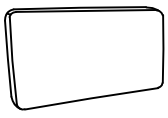 Backrest Pillow	3PCS
F	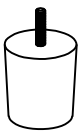 Accessory Feet	4PCS
G	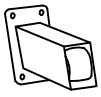 Pulley	4PCS

Please read this before you proceed		
NUMBER	COMPONENT	QUANTITY
H	 Self Tapping Screw 5*30mm	16PCS
I	 Screw Rod 8*70mm	6PCS
J	 Circular Gasket	6PCS
K	 Hex Nut	6PCS
L	 Hexagonal Wrench	1PC

Step 1

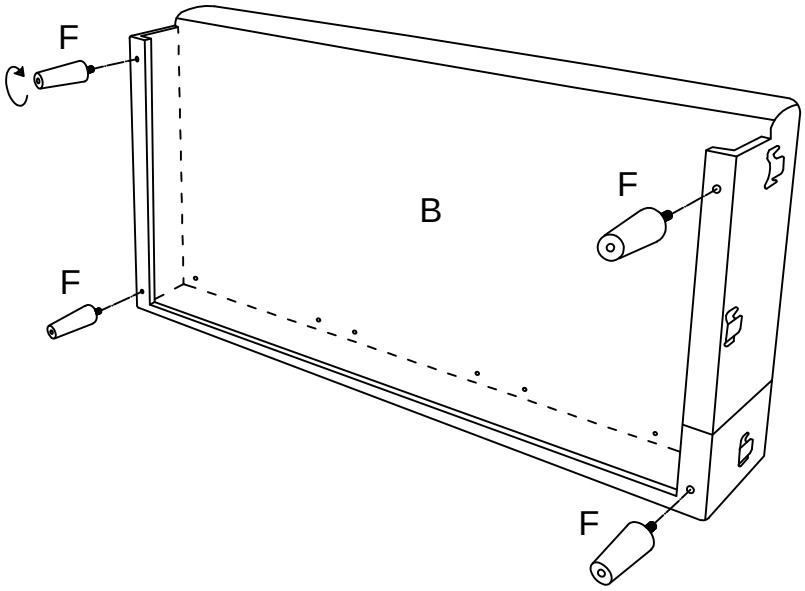

Step 2

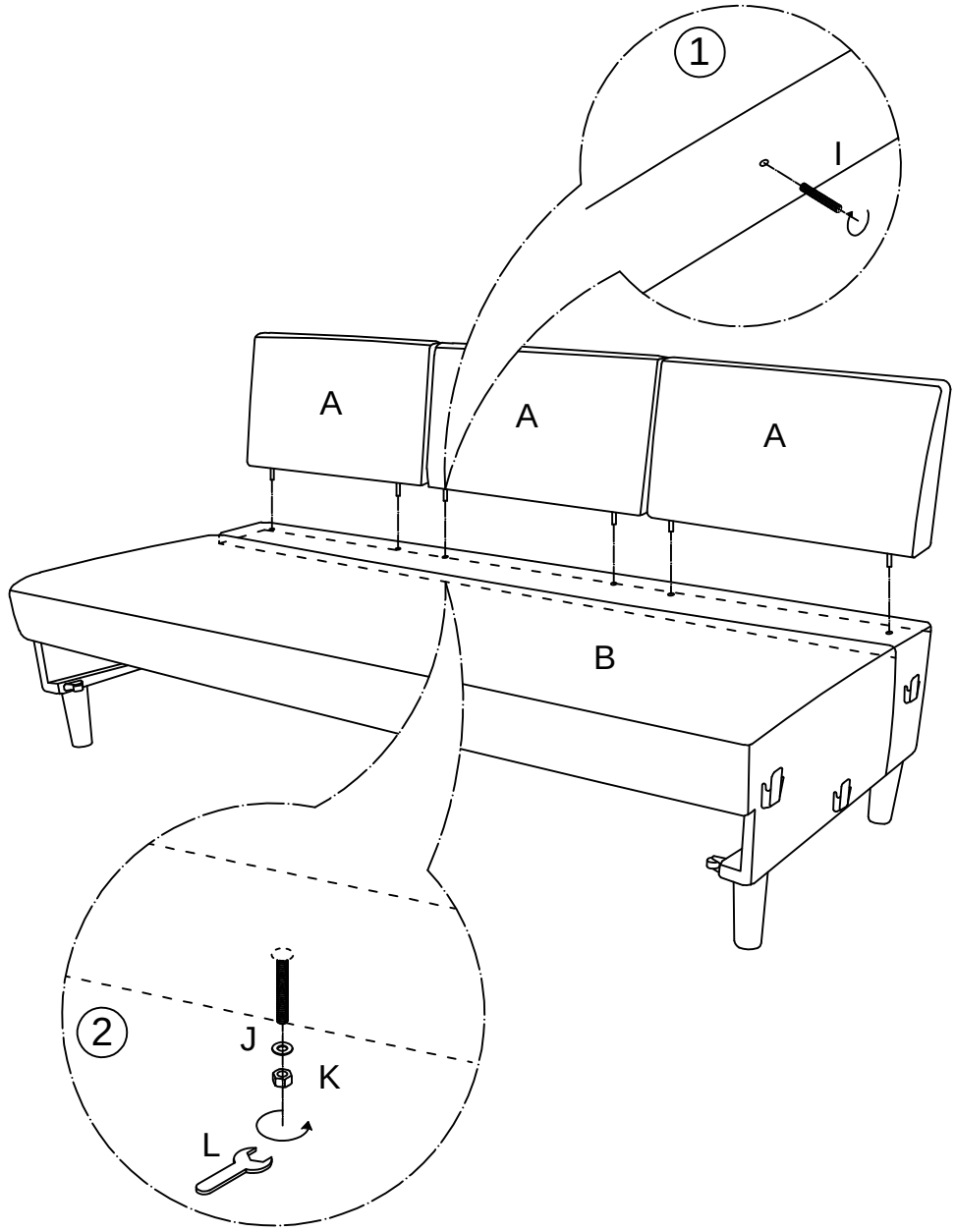

Step 3

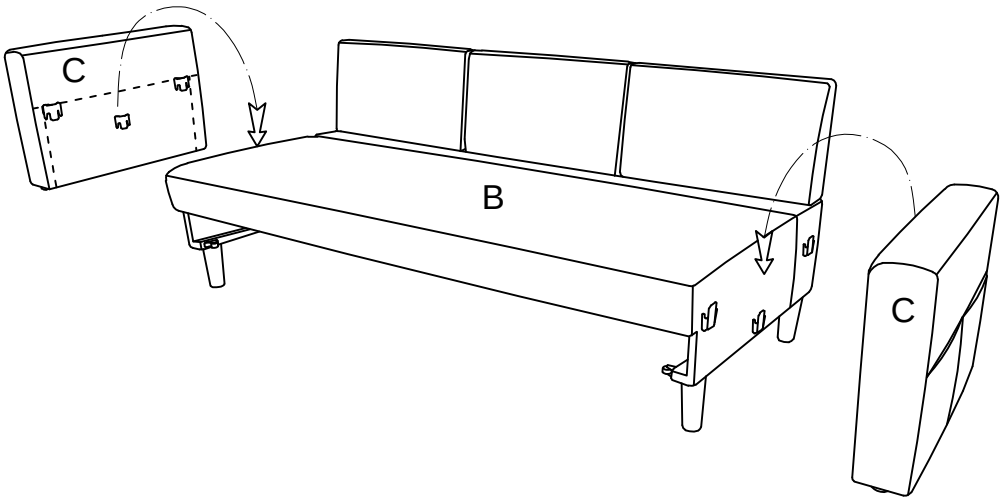

Step 4

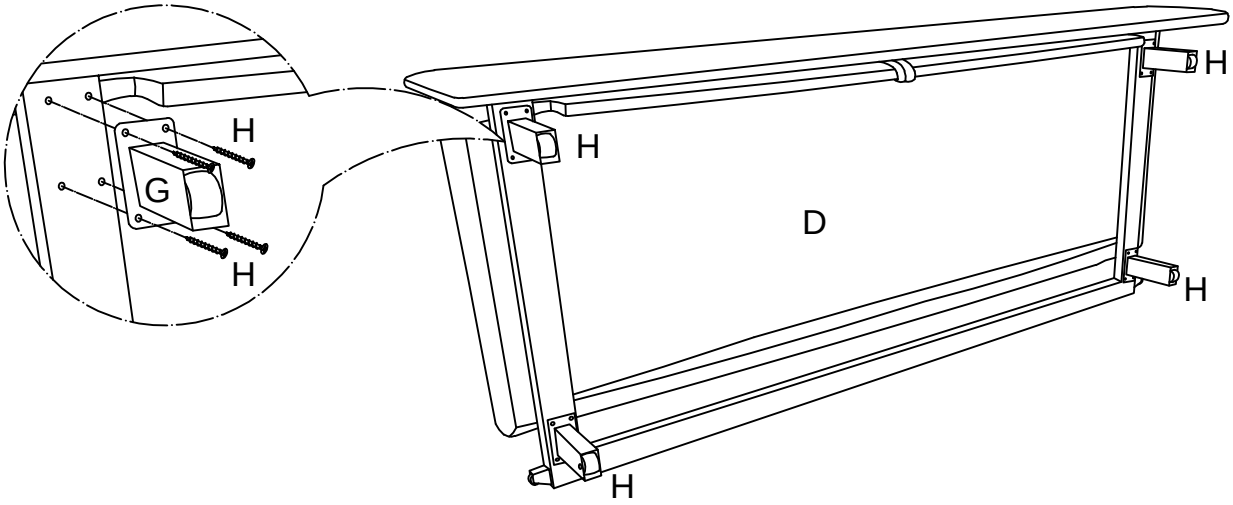

Step 5

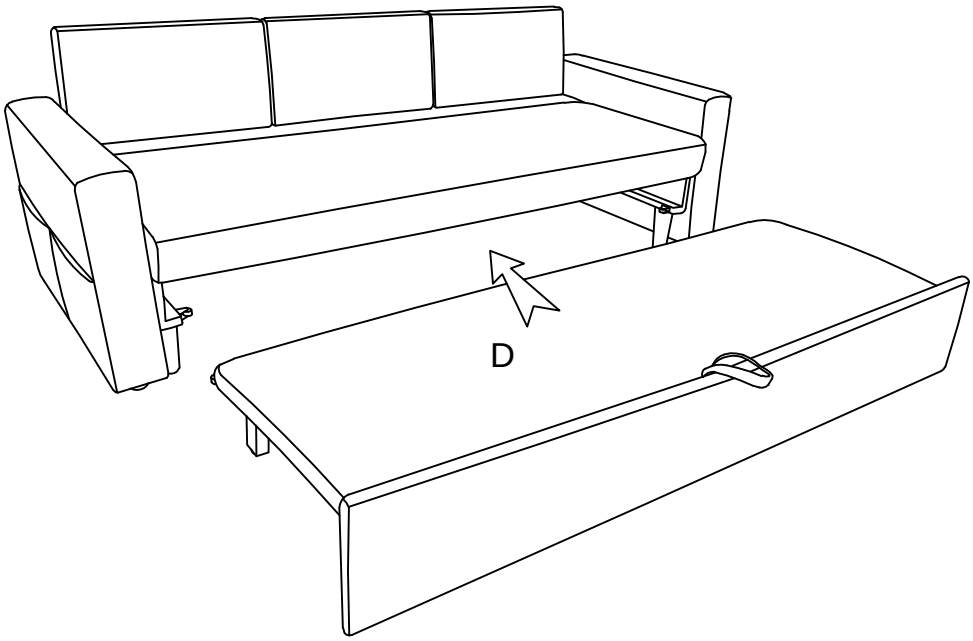

Step 6

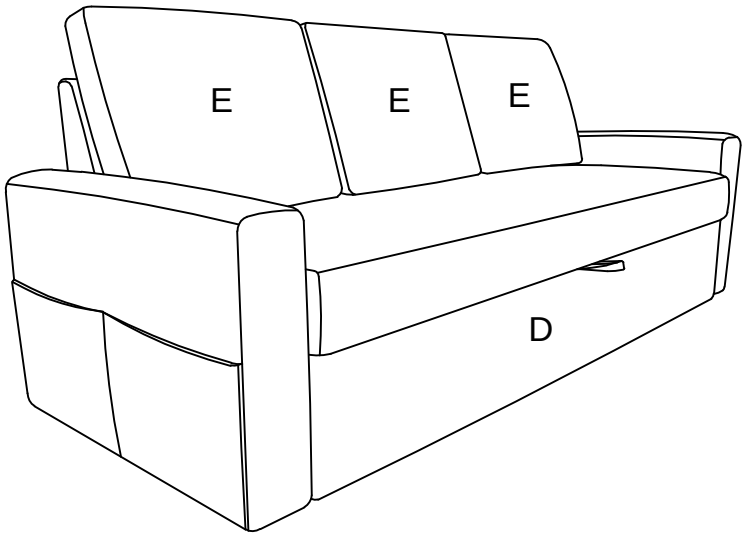

Step 7

