ASSEMBLY INSTRUCTION

# 074-000119

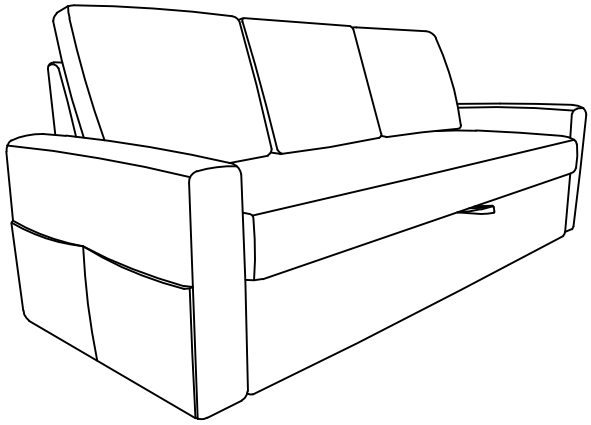

| Please read this before you proceed | | |
|---|---|---|
| NUMBER | COMPONENT | QUANTITY |
| A | 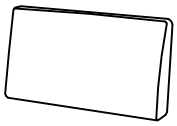 Sofa Backrest | 3PCS |
| B | 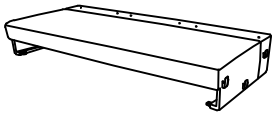 Three Seater Sofa Seat | 1PC |
| C | 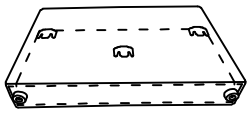 Armrest | 2PCS |
| D | 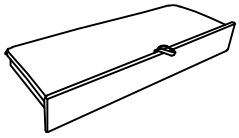 Movable Bed | 1PC |
| E | 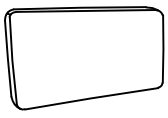 Backrest Pillow | 3PCS |
| F | 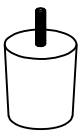 Accessory Feet | 4PCS |
| G | 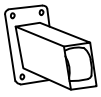 Pulley | 4PCS |

| Please read this before you proceed | | |
|---|---|---|
| NUMBER | COMPONENT | QUANTITY |
| H |  Self Tapping Screw 5*30mm | 16PCS |
| I |  Screw Rod 8*70mm | 6PCS |
| J |  Circular Gasket | 6PCS |
| K |  Hex Nut | 6PCS |
| L |  Hexagonal Wrench | 1PC |

Step 1

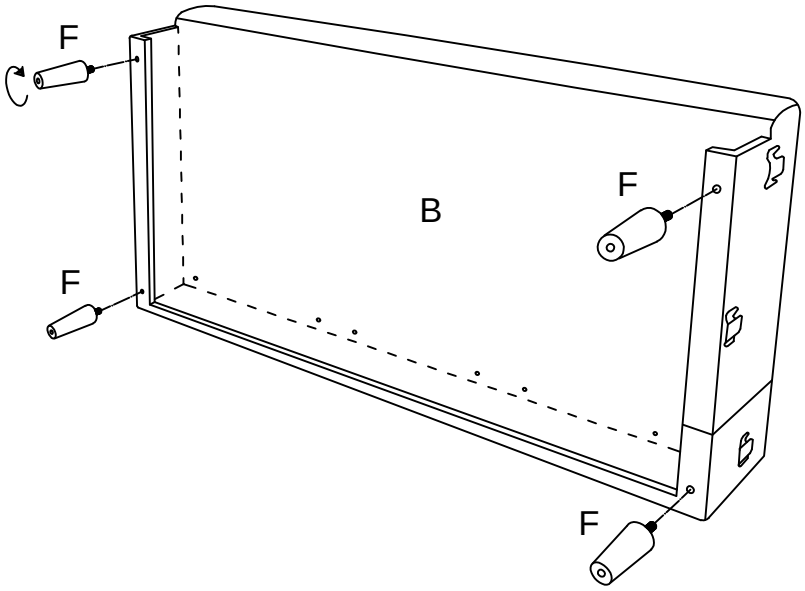

Step 2

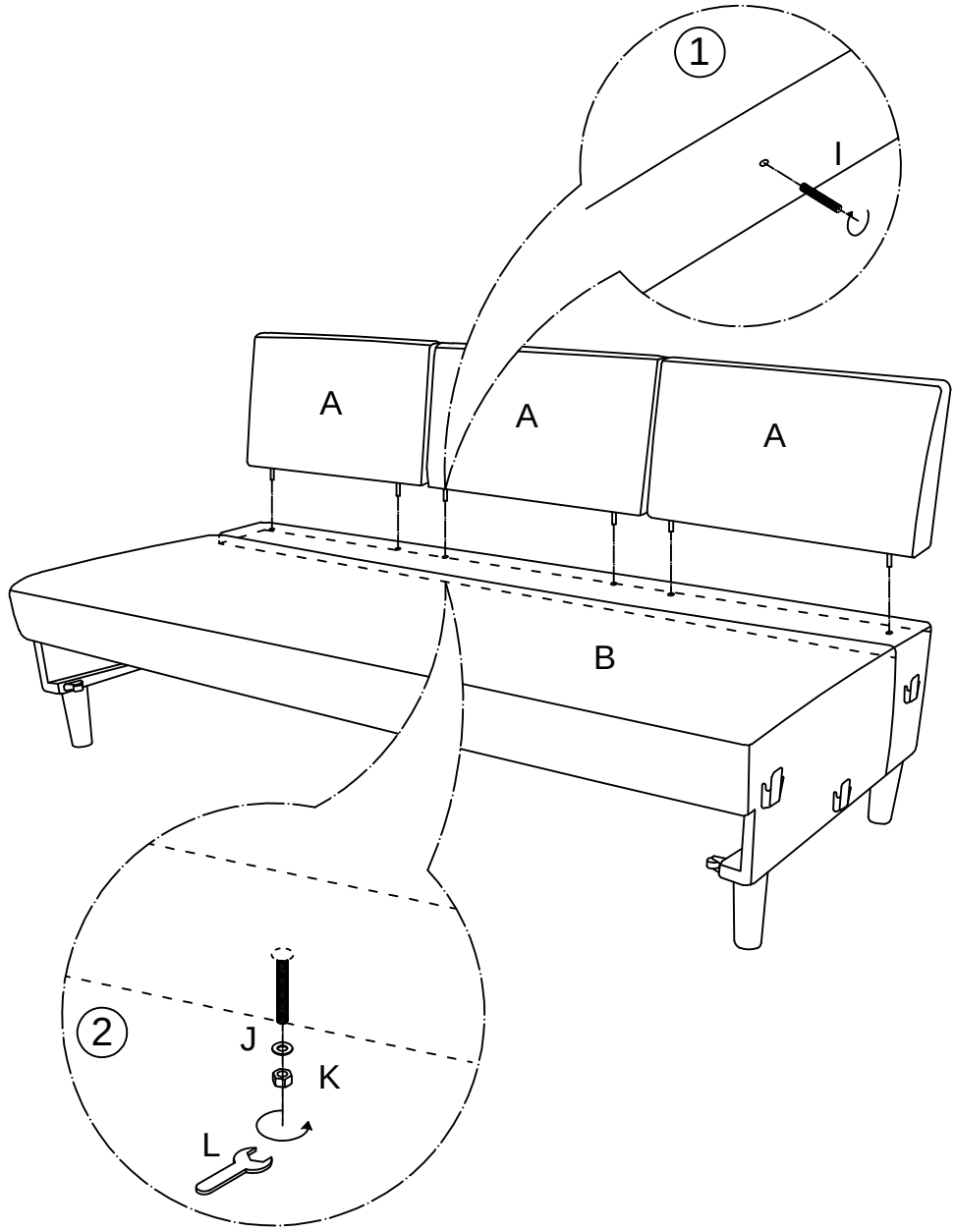


Step 3

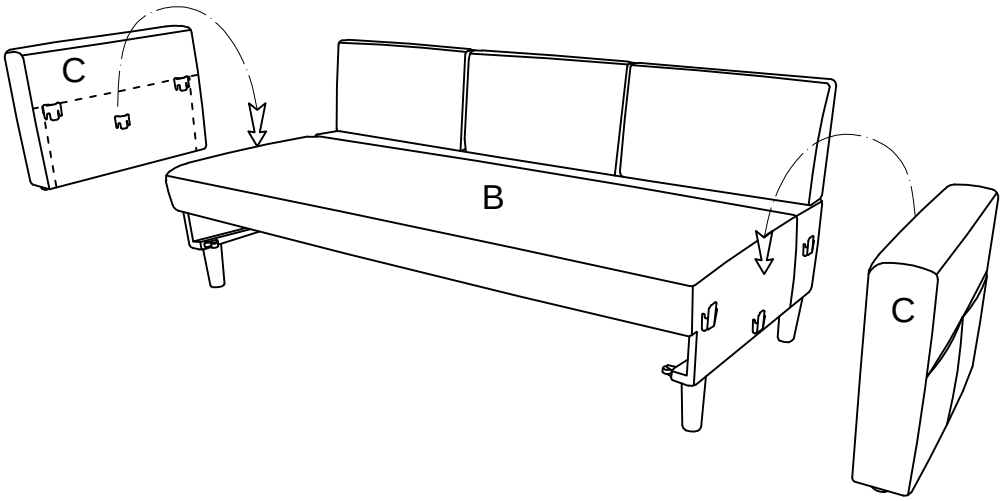

Step 4

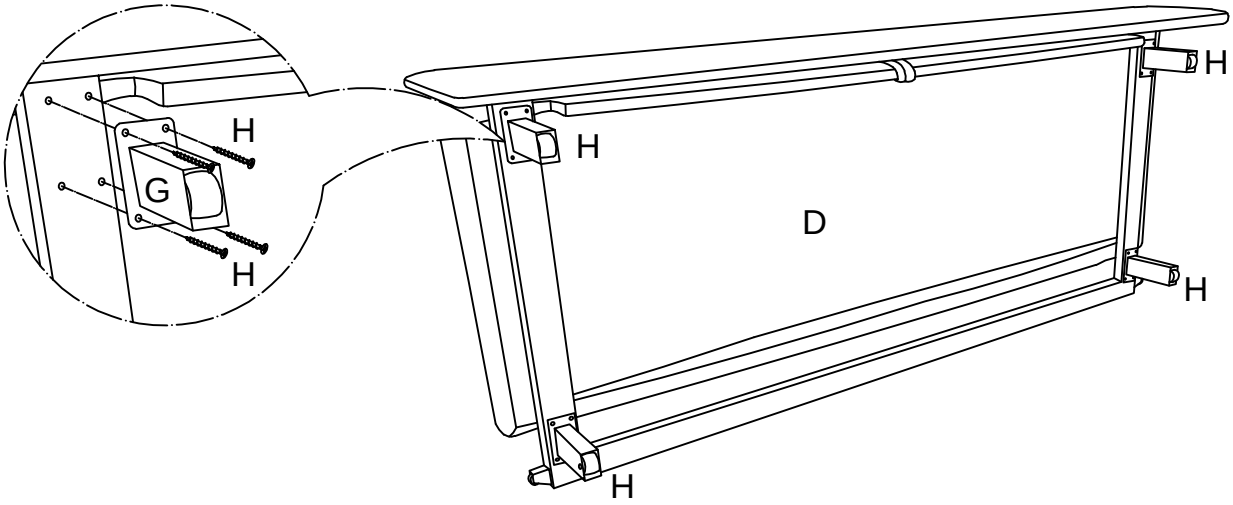


Step 5

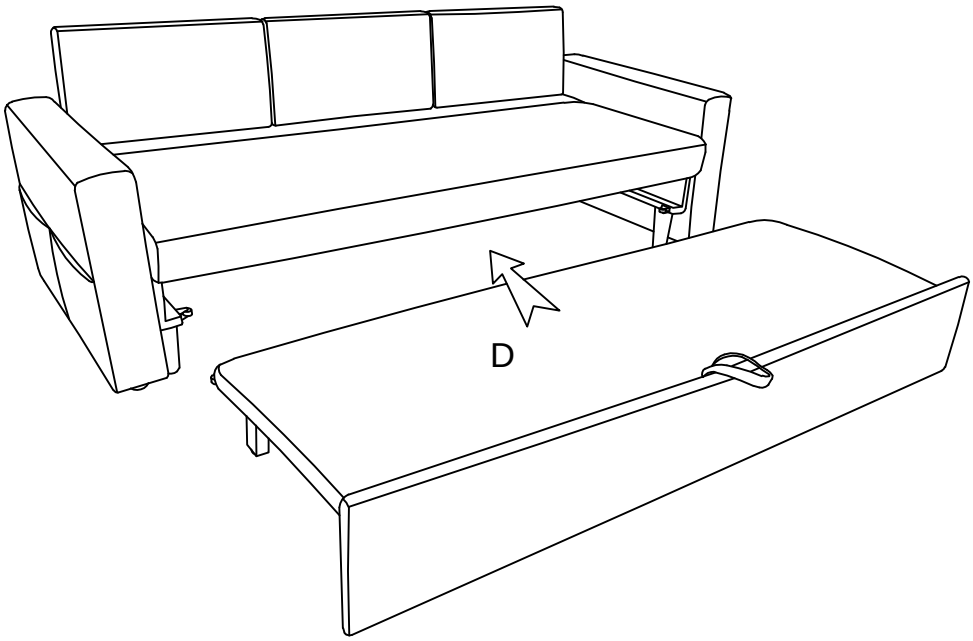

Step 6

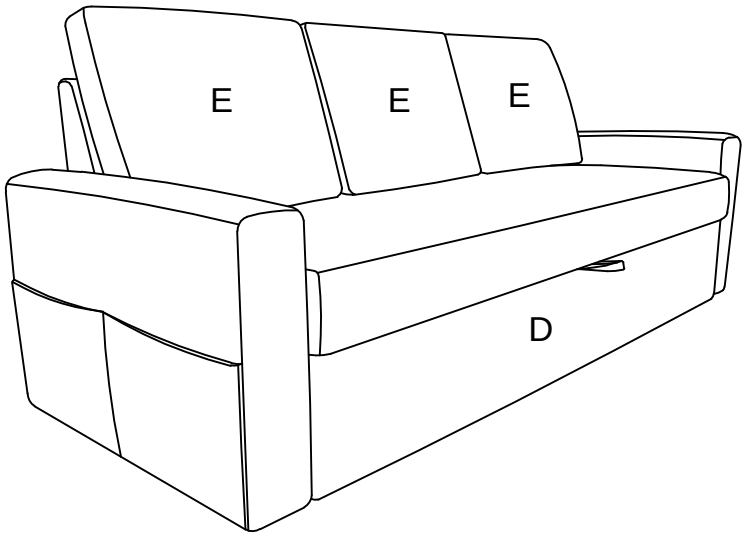


Step 7

