# ASSEMBLY INSTRUCTION

## 074-000063

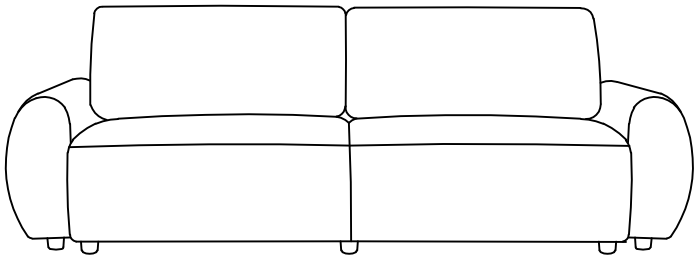

| Please read this before you proceed | | |
|---|---|---|
| NUMBER | COMPONENT | QUANTITY |
| A | 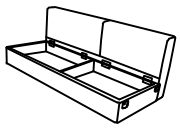 Three Seater Sofa Seat | 1PC |
| B | 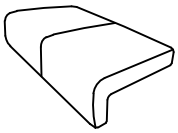 Three-Seater Sofa Seat Cushion | 1PC |
| C | 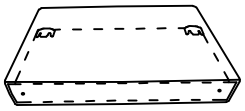 Armrest | 2PCS |
| D |  Backrest Pillow | 2PCS |
| E | 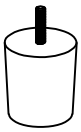 Accessory Feet | 11PCS |

Step 1

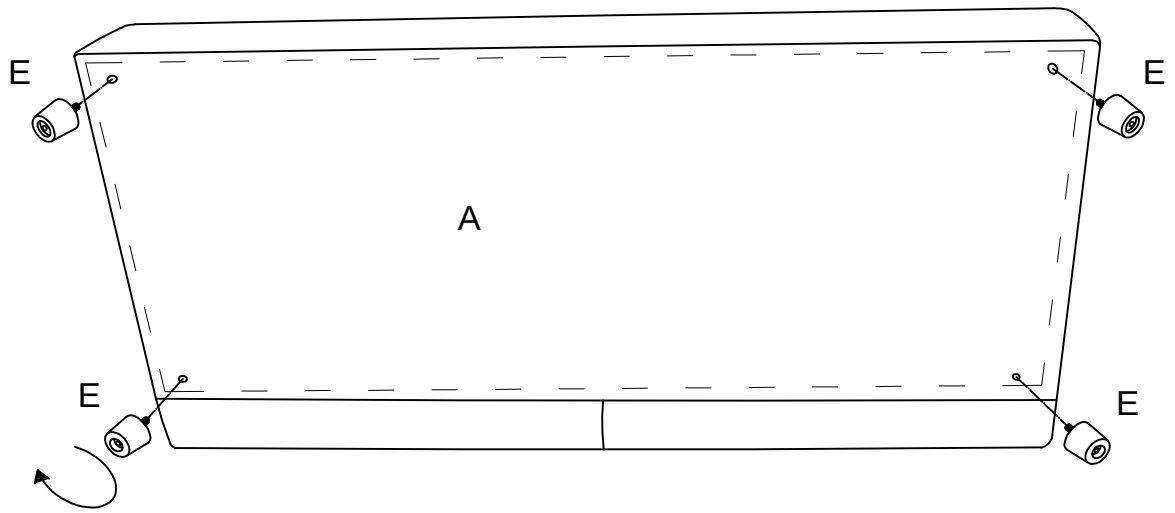


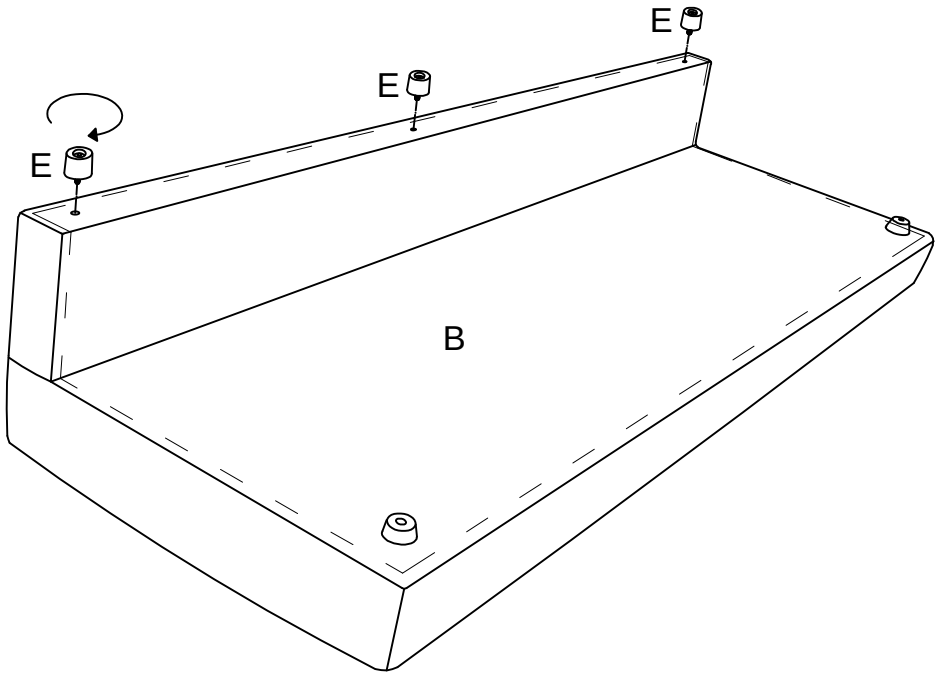


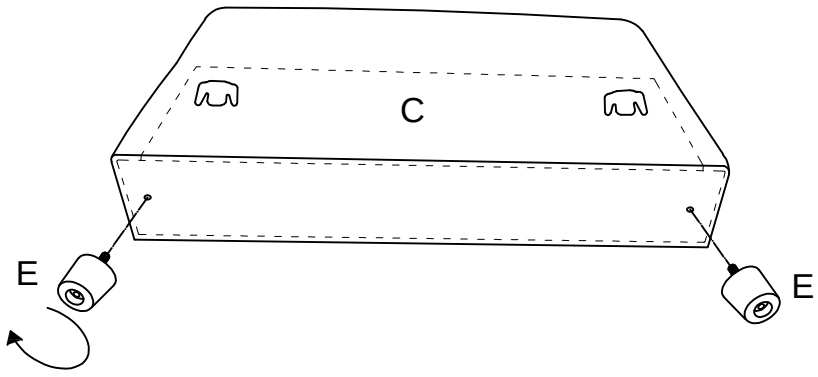

Step 2

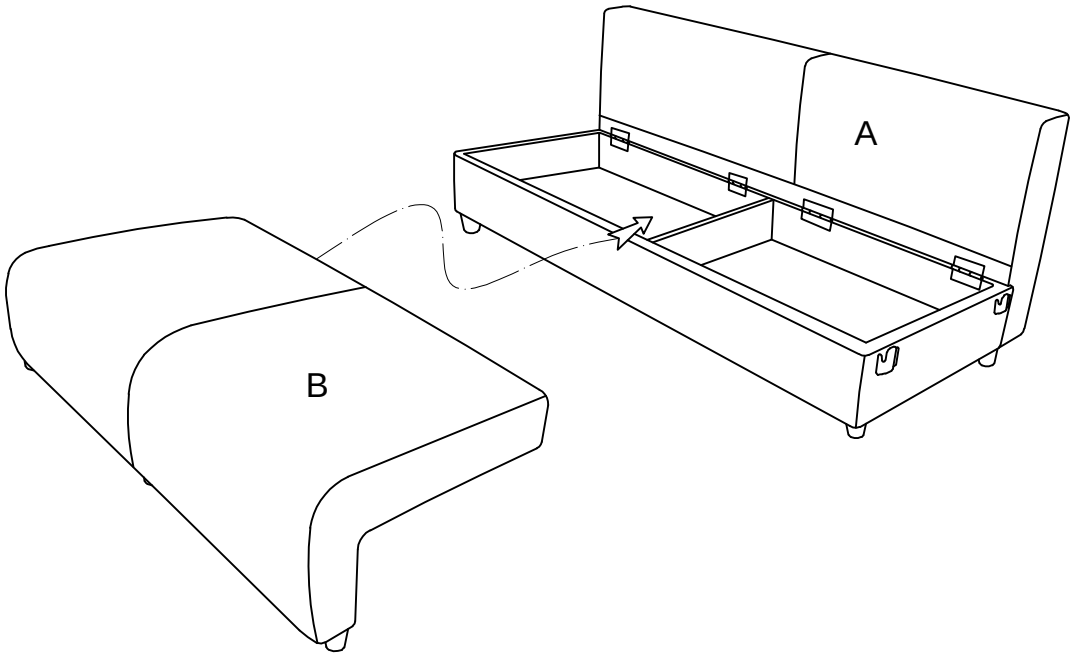


Step 3

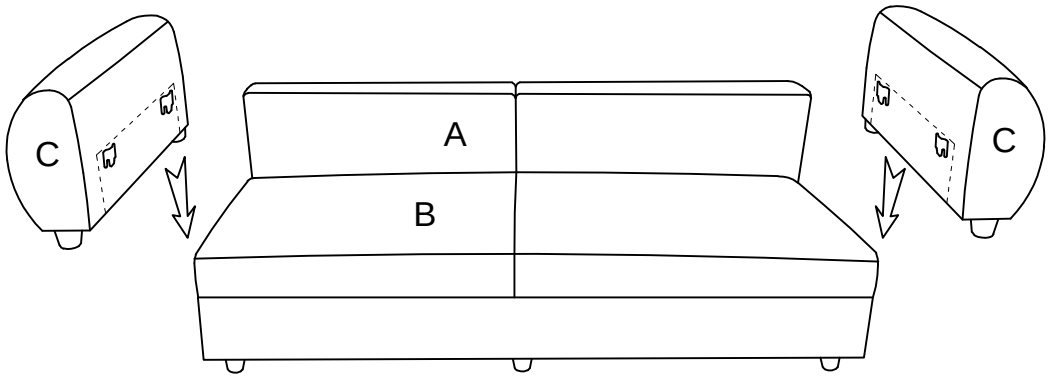


Step 4

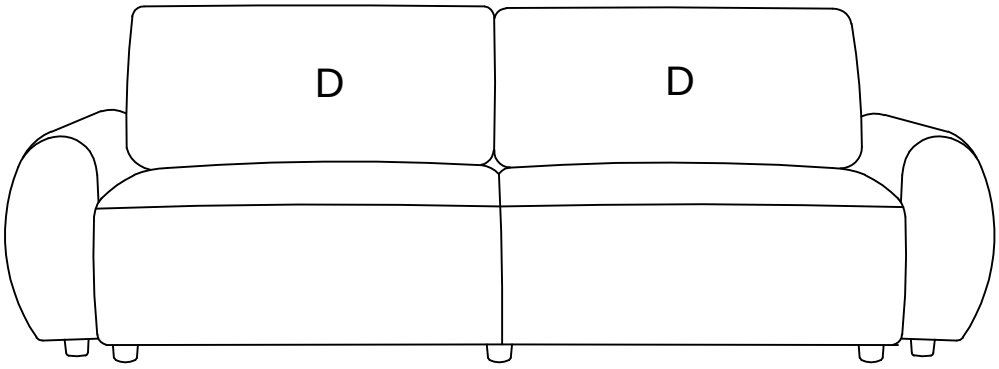

Step 5

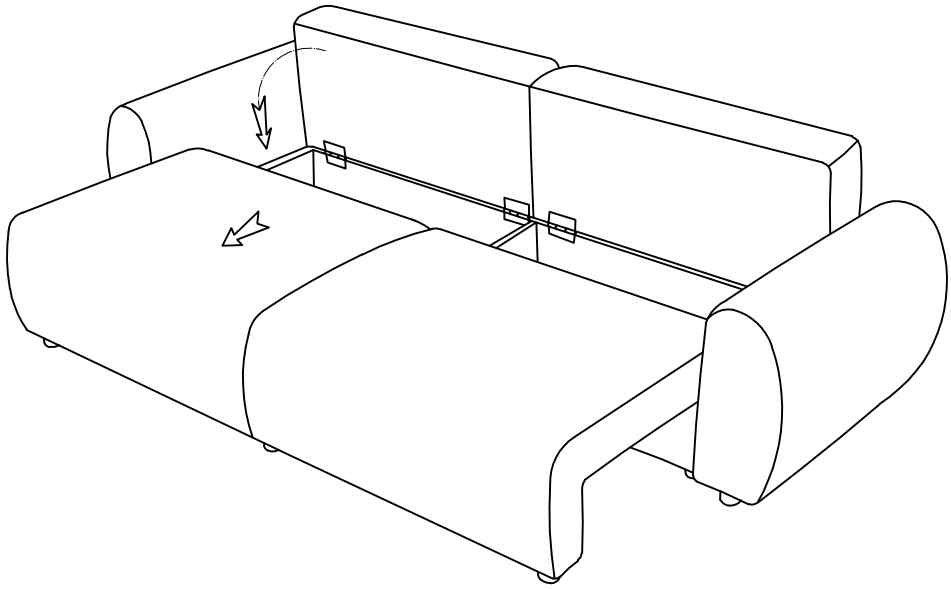

Step 6

