029-000173

ASSEMBLY INSTRUCTION

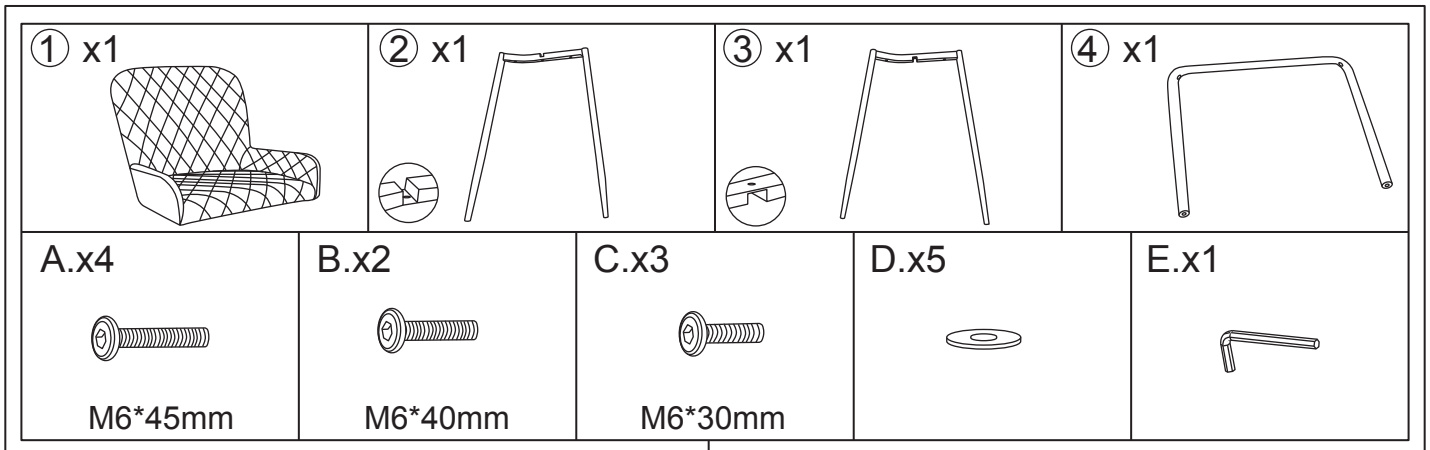

Step1

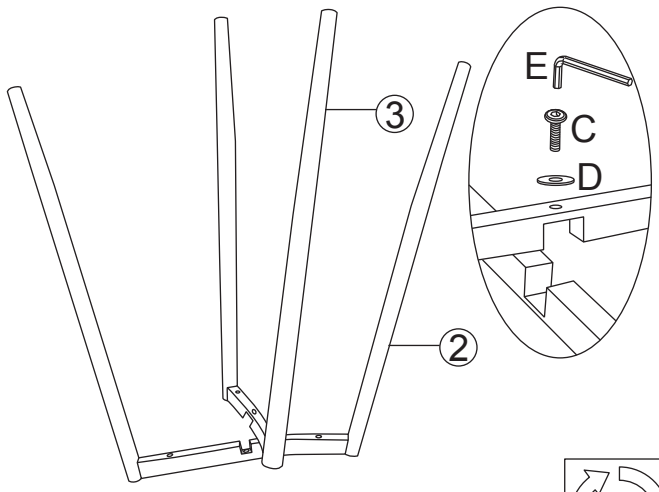

Step2

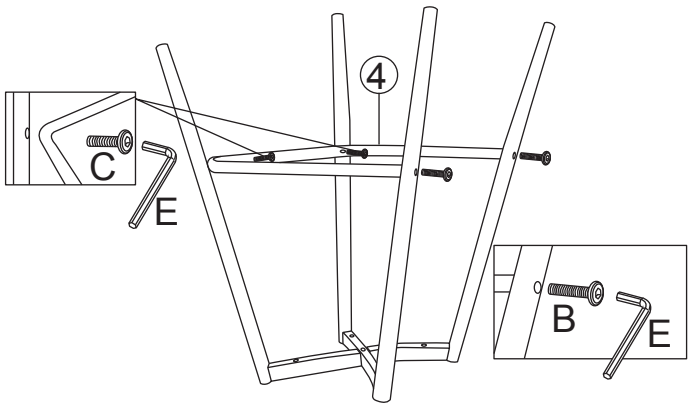

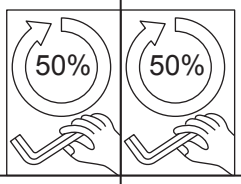

Step3

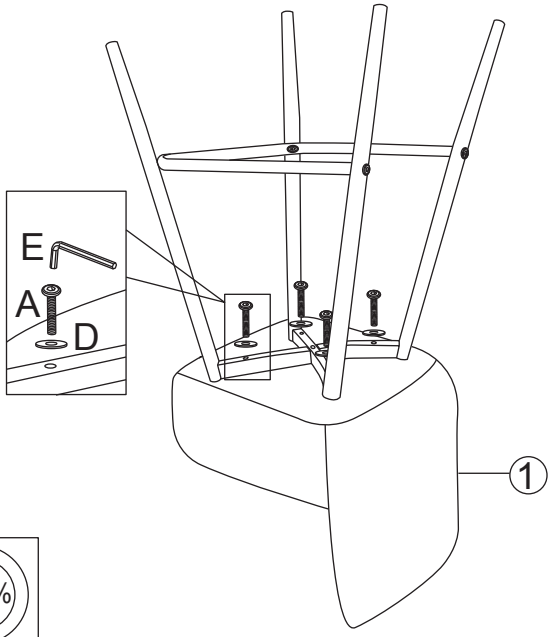
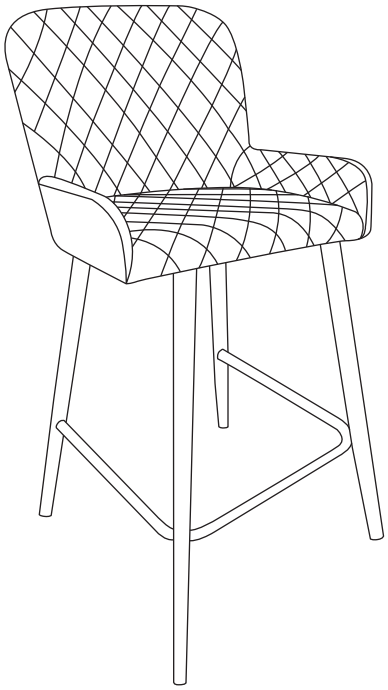
Step4