029-000154

A	B	C	D	E	F	G	H
1	1	1	4	5	1	1	4

1

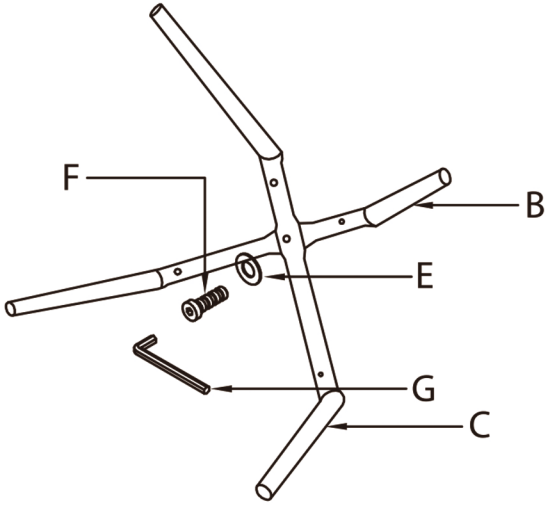

2

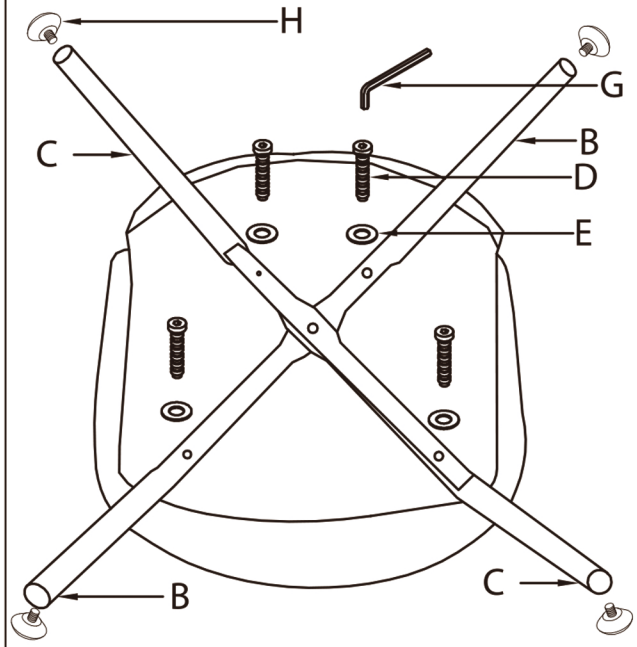

3

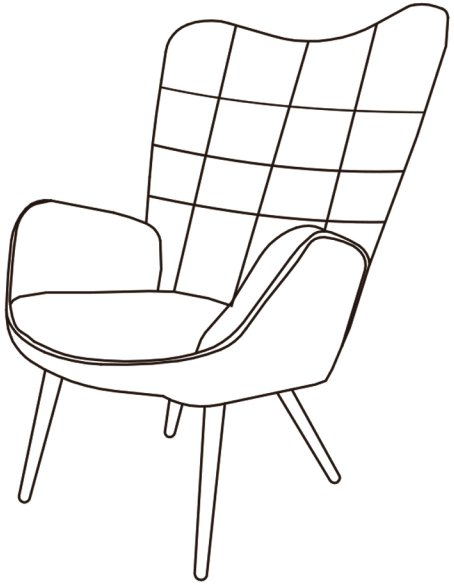

A	B	C	D
	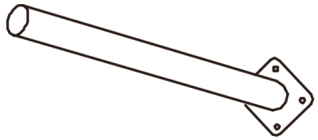		
1	4	16	1

1

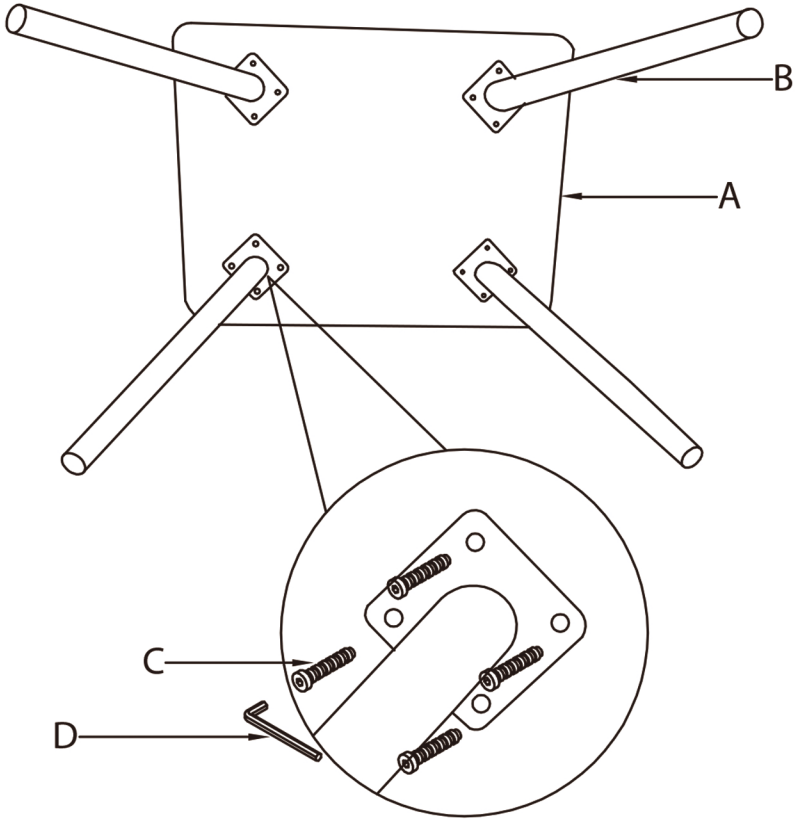
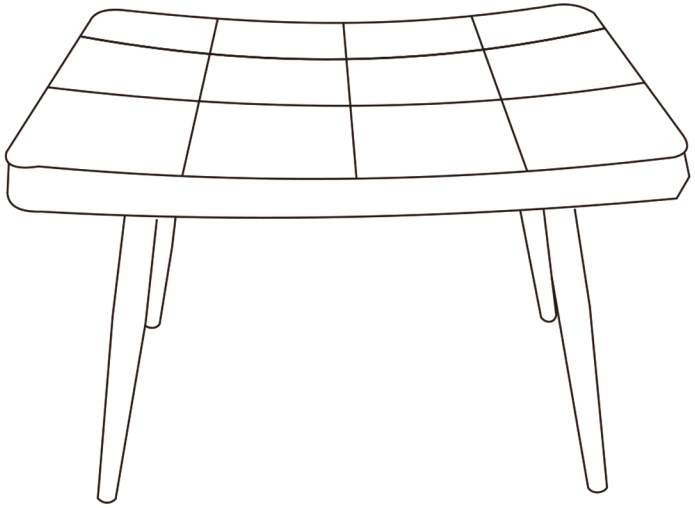
2