ASSEMBLY INSTRUCTION

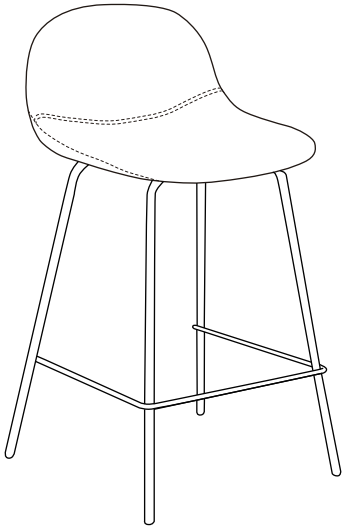

A 1PC	B 1PC	C 4PCS
D 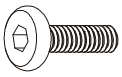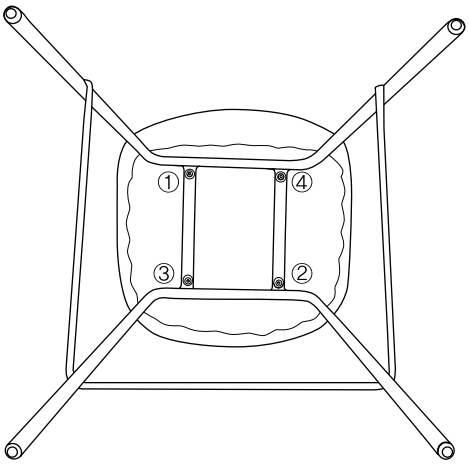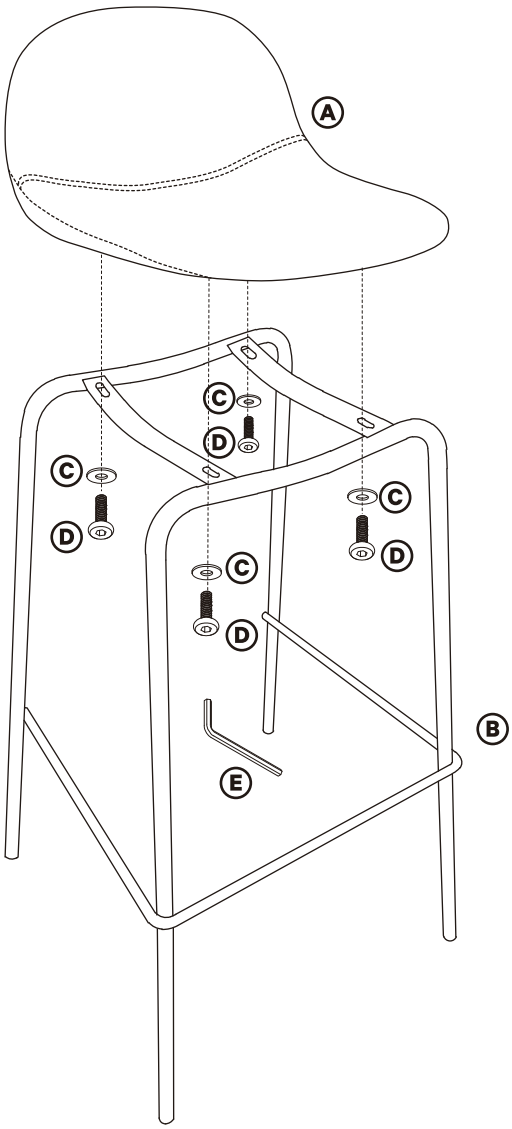 4PCS	E 1PC