# ASSEMBLY INSTRUCTION

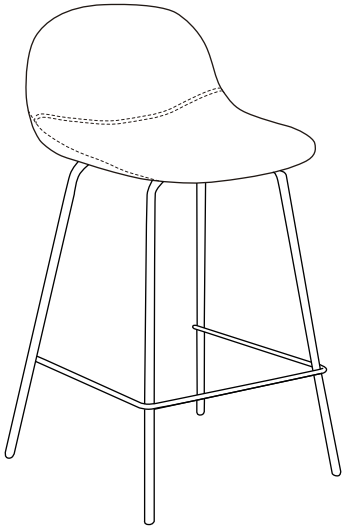

| | | |
|---|---|---|
| A 1PC | B 1PC | C 4PCS |
| D 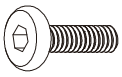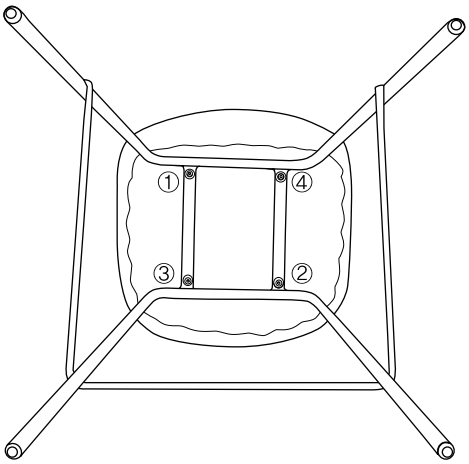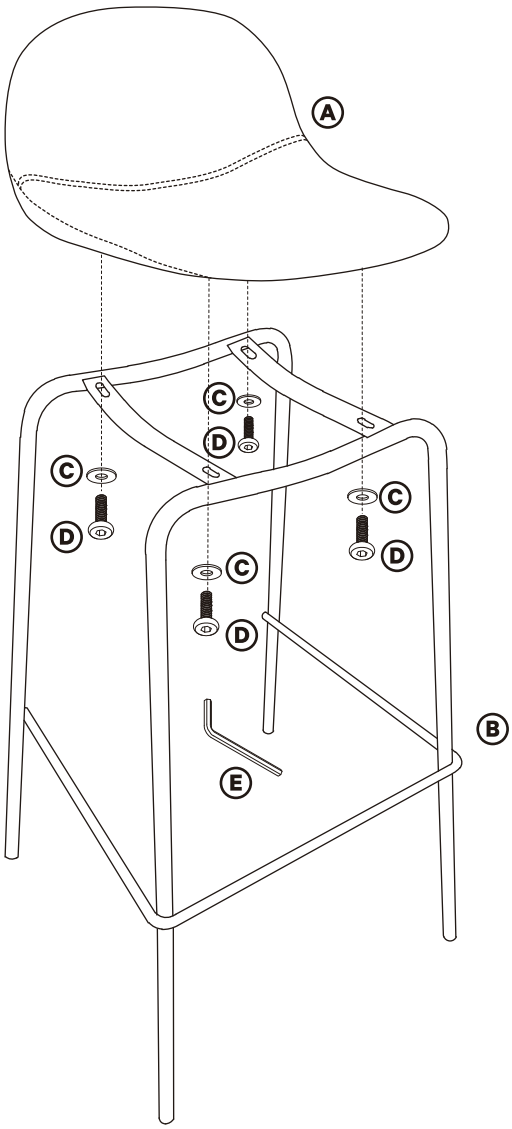 4PCS | E 1PC | |
| | | |